*REMOVE EXISTING SHOULDERS

SLOPE CONTROLS		
SLOPE	CUT	FILL
4:1	——	0-10'
2:1	ALL	OVER 10'

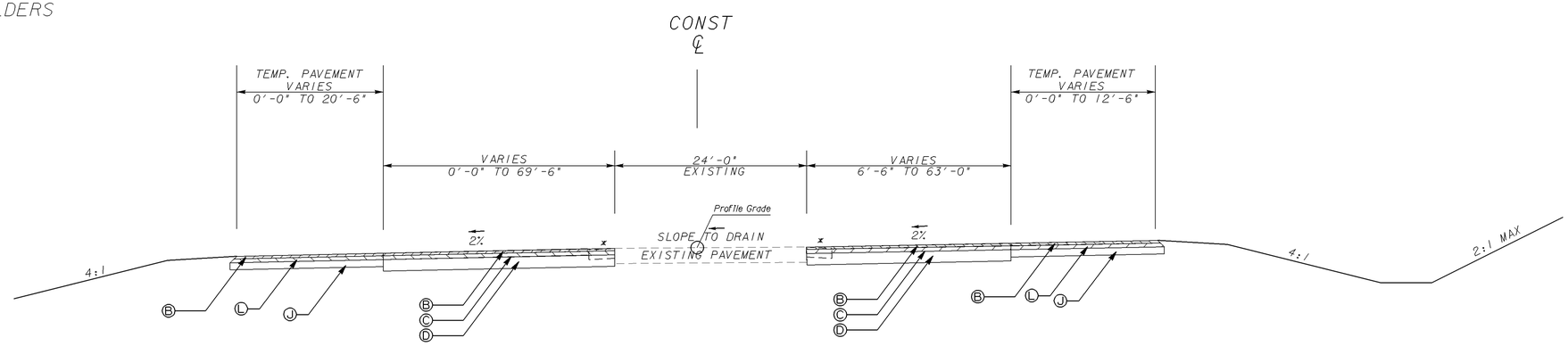

TS-13

TEMPORARY PAVEMENT
SEE STAGING PLAN SHEETS FOR LOCATIONS

PAVEMENT DESIGN

- (A) 165 LB/SY RECYCLED ASPH CONC 12.5 MM SUPERPAVE, GP 2 ONLY, INCL BITUM MATL & H LIME
- (B) 220 LB/SY RECYCLED ASPH CONC 19 MM SUPERPAVE, GP 1 OR 2 ONLY, INCL BITUM MATL & H LIME
- (C) 440 LB/SY RECYCLED ASPH CONC 25 MM SUPERPAVE, GP 1 OR 2 ONLY, INCL BITUM MATL & H LIME
- (D) 12IN GR AGGR BASE CRS, INCL MATL
- (E) GDOT STD 9032B CONC CURB & GUTTER, 8 IN X 30 IN, TP2
- (F) GDOT STD 9032B CONC HEADER CURB, 4 IN, TP9
- (G) GDOT STD 9032B CONC HEADER CURB, 6 IN, TP7
- (H) CONC SIDEWALK, 4 IN
- (I) MILL ASPH CONC PAVEMENT, VARIABLE DEPTH (SR 223 ONLY)
- (J) 6IN GR AGGR BASE CRS, INCL MATL
- (K) 16" MILLED RUMBLE STRIPS (SEE PLANS FOR LOCATION)
- (L) 330 LB/SY RECYCLED ASPH CONC 25 MM SUPERPAVE, GP 1 OR 2 ONLY, INCL BITUM MATL & H LIME
- (M) RED BRICK PATTERN STAMPED CONCRETE (FED CODE *21136)
- (N) GDOT DETAIL P-7 PAVEMENT EDGE TREATMENT
- (O) PLAIN PC CONC, 10 IN

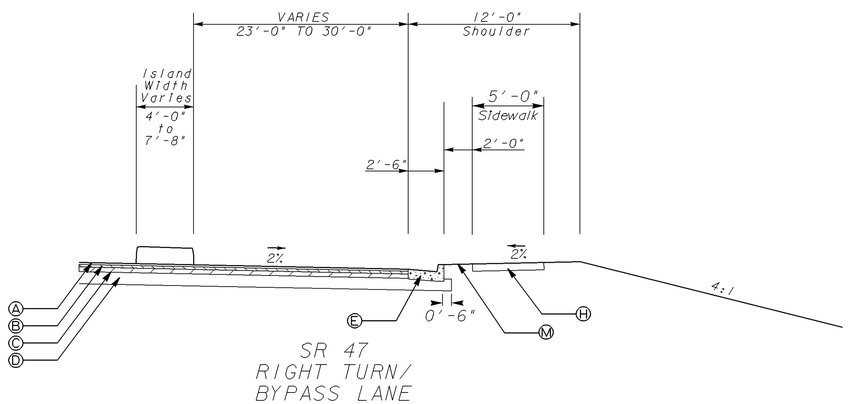

SR 47
RIGHT TURN/
BYPASS LANE

SEE PLAN SHEETS FOR LOCATION OF ISLAND

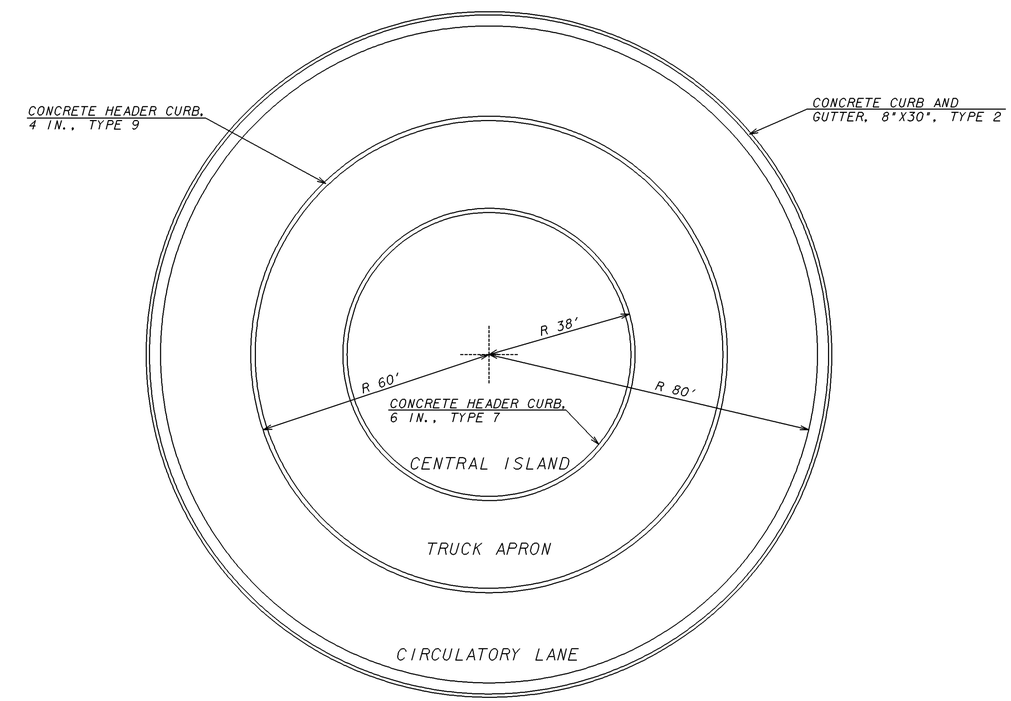

ROUNDABOUT PLAN VIEW

				REVISION DATES			
		GEORGIA DEPARTMENT OF TRANSPORTATION	NO SCALE	03/19/13			STATE OF GEORGIA DEPARTMENT OF TRANSPORTATION
							OFFICE: ROADWAY DESIGN
							TYPICAL SECTIONS
							SR47 @ SR223 INTERSECTION IMPROVEMENT — DRAWING NO. 05-007

3/1/2007 GPLN 004732TY01.dgn 09:08 Dec 1-63