STATE	PROJECT NUMBER	SHEET NO.	TOTAL SHEETS
GA.	STP-0004-00(588)	30	53

TP 1-3

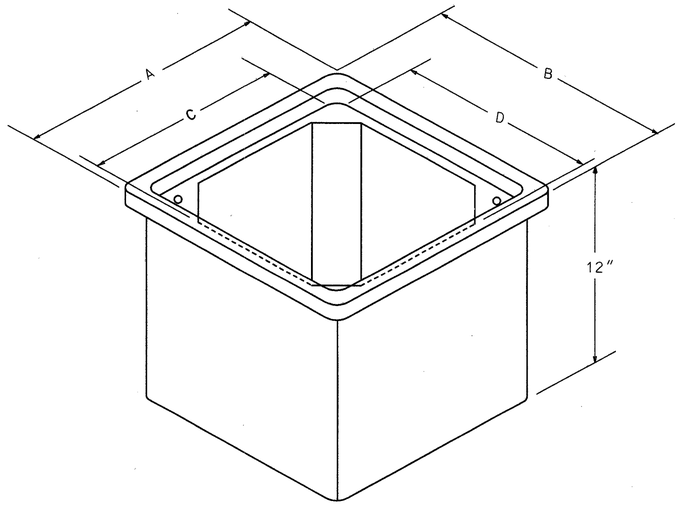

PULL BOX SIZE NO.	* APPROX. (in.)			
	A	B	C	D
1	19	13	12	12
2	21	14	18	11
3	33	20	30	17
4	38	26	36	24
5	50	32	48	30

* SIZES SHOWN ARE MINIMUMS, SEE SPECIAL PROVISIONS FOR MATERIAL ALLOWANCES.

DETAIL FOR PULL BOX CONDUIT

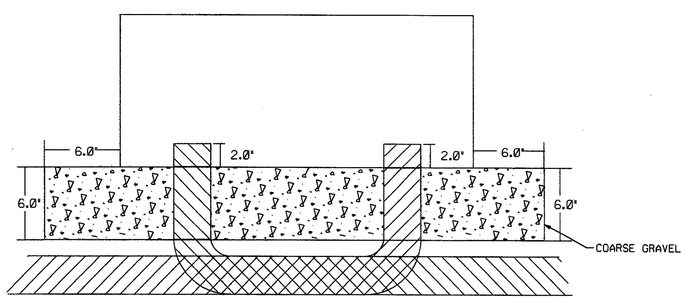

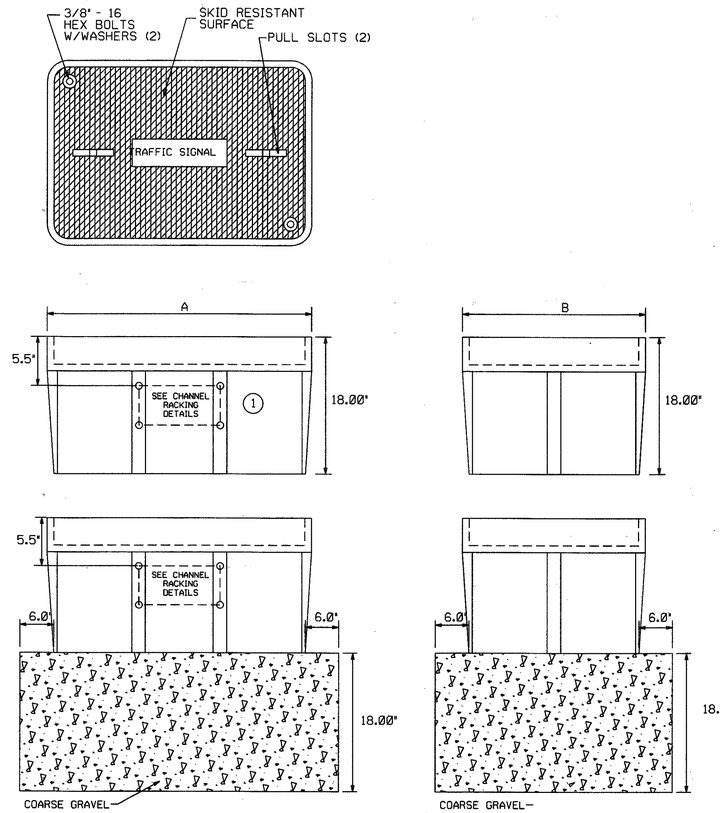

TYPE 4 AND 5 PULL BOX ASSEMBLY
1 - HEAVY DUTY COVER
1 - OPEN BOTTOMED BOX
1 - CLOSED BOTTOMED BOX W/WIRE MESH COVERED 2" DRAIN HOLE

NOTES FOR TYPE 4 AND 5 PULL BOXES

1. PULL BOX ASSEMBLY SHALL BE DEFINED TO INCLUDE (1) HEAVY DUTY COVER, (1) OPEN BOTTOMED BOX AND (1) CLOSED BOTTOMED BOX. THE ASSEMBLY SHALL FIT TOGETHER SO THAT THE COVER FITS ON TOP OF THE OPEN BOTTOMED BOX, AND THE OPEN BOTTOMED BOX IS STACKED ON TOP OF THE CLOSED BOTTOMED BOX. THE BOTTOM OF THE CLOSED BOTTOMED BOX SHALL HAVE A 2" DIAMETER HOLE IN THE CENTER OF THE BOX AND SHALL BE OF SUFFICIENT PITCH TO ALLOW THE BOX TO DRAIN QUICKLY AND THOROUGHLY. THE 2" DIAMETER HOLE SHALL BE FITTED WITH A WIRE MESH THAT SHALL ALLOW THE DRAINING OF WATER WHILE PREVENTING THE ENTRY OF RODENTS AND OTHER ANIMALS. EACH BOX IN THIS ASSEMBLY SHALL HAVE CHANNEL RACKING INSTALLED AS SHOWN ON THIS DETAIL PRIOR TO DELIVERY TO THE CONTRACTOR.
2. ALL CONDUIT HOLES TO BE CUT BY CONTRACTOR.
3. AN AGGREGATE BASE OF COARSE GRAVEL EXTENDING 18" BELOW THE BOTTOM AND 6" OUT FROM EACH SIDE OF PULL BOX ASSEMBLY REQUIRED WITH INSTALLATION.

CHANNEL RACKING DETAILS

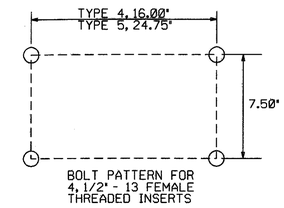

NOTES

1. INSERTS TO BE CENTERED ON ONE WALL OF TYPE 4 & 5 BOXES, 5.625" FROM THE TOP OF EACH BOX.
2. TWO PIECES OF ALUMINUM OR STEEL CHANNEL 11" LONG PIERCED CHANNEL, UNISTRUT NO. P1000-H3 OR EQUAL, (41.3 X 41.3 CM) TO BE SUPPLIED WITH EACH BOX, TYPE 4 AND TYPE 5 BOXES.
3. BOLTS TO BE 1/2" - 13 X 3/4" LONG STAINLESS STEEL.
4. CHANNEL RACKING TO BE INSTALLED PRIOR TO DELIVERY OF PULL BOX ASSEMBLY.

FIBER OPTIC UNDERGROUND SPLICE IN
TYPE V PULL BOX

TYPE V PULL BOX 24"W, 48" L, 24"H

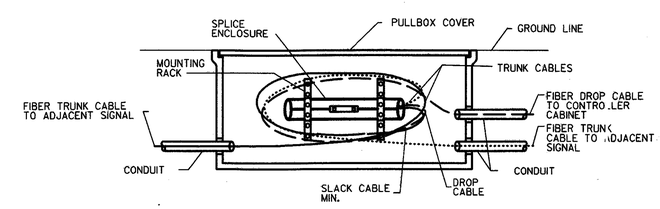

DATE	REVISIONS
11/02/2000	REMOVED CONDUIT SIZE FOR UNDERGROUND SPLICE

GEORGIA DEPARTMENT OF TRANSPORTATION
OFFICE OF TRAFFIC SAFETY & DESIGN

PULL BOX ASSEMBLY DETAILS

NO SCALE

DECEMBER 1998

\TS 02 - Pull Box Details.dgn 1/30/2004 1:27:19 PM