STATE	PROJECT NUMBER	SHEET NO.	TOTAL SHEETS
GA.	STP-0004-00(588)	29	53

INDUCTIVE LOOP VEHICLE DETECTOR DETAILS

USING STRANDED COPPER WIRE

PLAN VIEW OF STANDARD LOOP SAW CUTS

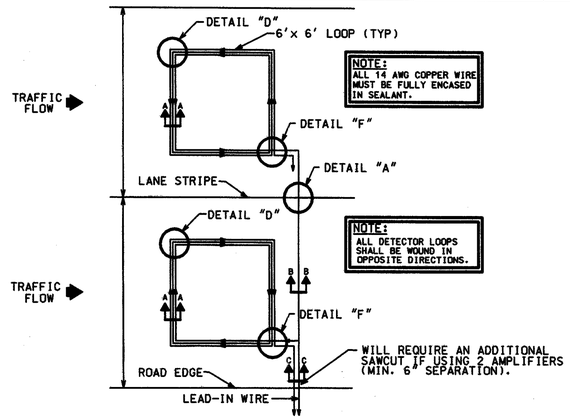

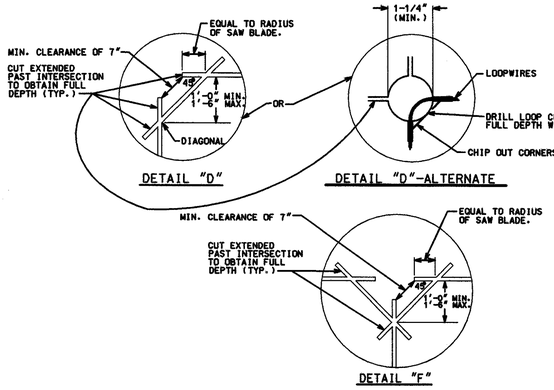

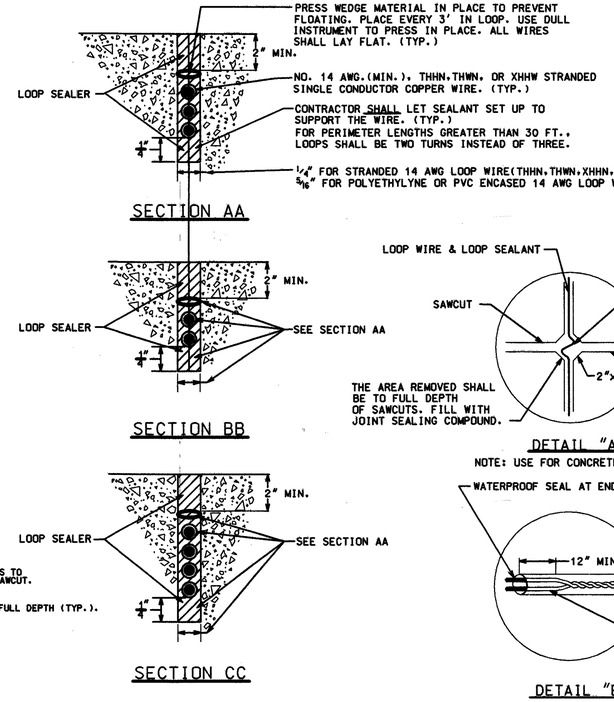

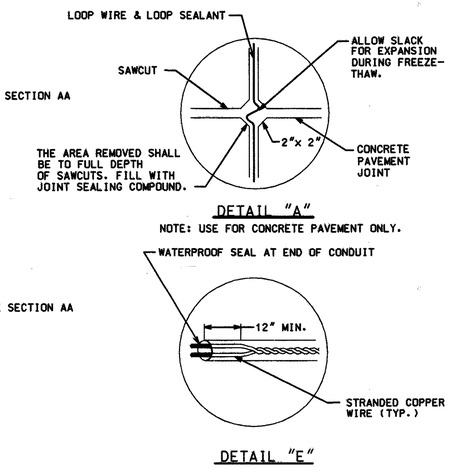

PLAN VIEW OF QUADRUPOLE

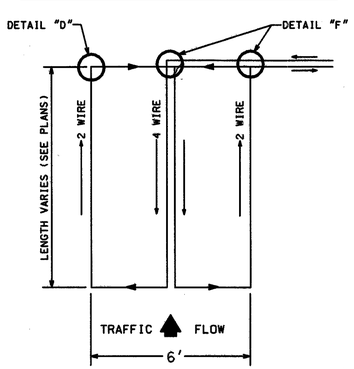

NO SCALE

LOOP WIRE CONFIGURATION

THE DOUBLE LAYER CONFIGURATION (2-4-2) SHOWN IS A MINIMUM DESIGN FOR NORMAL INSTALLATIONS WHEN REQUIRED BY THE PLANS.

PLAN VIEW OF STANDARD LOOP

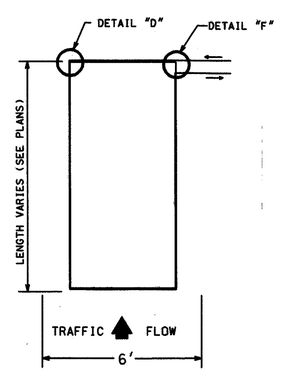

NO SCALE

LOOP WIRE CONFIGURATION

THE DOUBLE LAYER CONFIGURATION (2-2) SHOWN IS A MINIMUM DESIGN FOR NORMAL INSTALLATIONS WHEN REQUIRED BY THE PLANS.

TYPICAL CURB DETAIL

(WITH SIDEWALK)

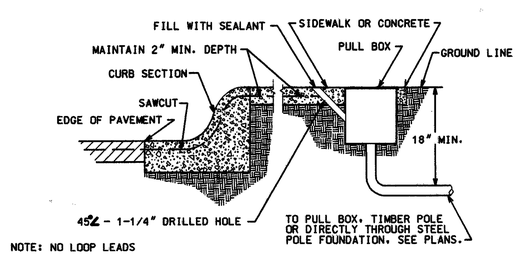

NOTE: NO LOOP LEADS THROUGH TURNING RADIUS

TYPICAL CURB DETAIL

(WITHOUT SIDEWALK)

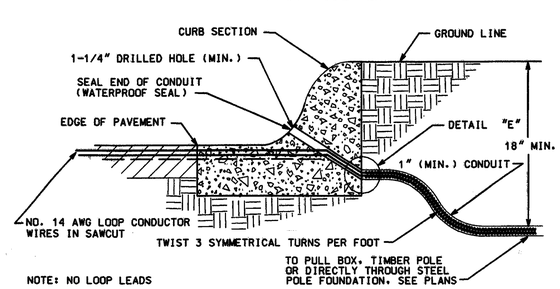

NOTE: NO LOOP LEADS THROUGH TURNING RADIUS

PULL BOX-SPLICE DETAILS

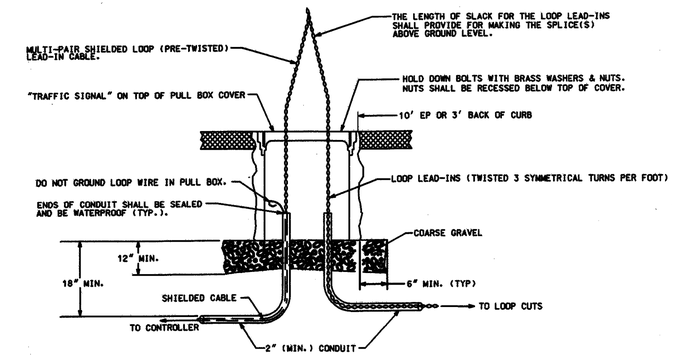

SPLICE DETAILS

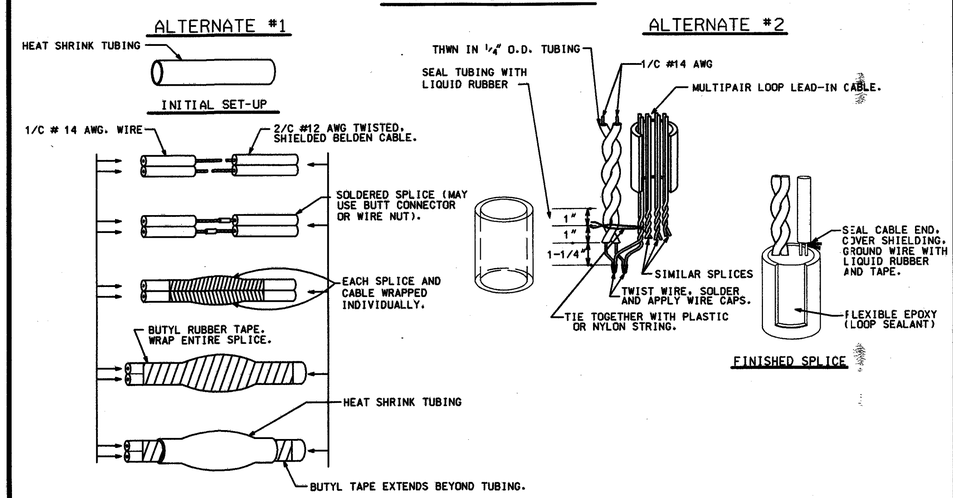

NOTE:
FINISHED SPLICE MUST BE WATERPROOF.

DETAIL WHERE NO CURB EXISTS

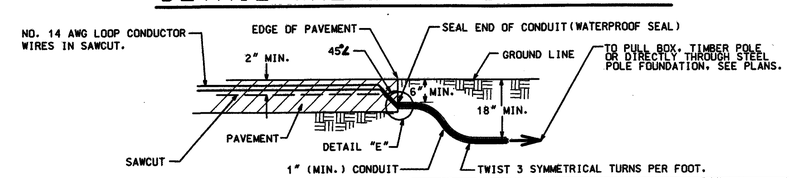

NOTE: NO LOOP LEADS THROUGH TURNING RADIUS

DATE	REVISIONS
1/30/04	ADDED DETAIL "E"

GEORGIA DEPARTMENT OF TRANSPORTATION
OFFICE OF TRAFFIC SAFETY & DESIGN

LOOP DETECTOR INSTALLATION DETAIL

NO SCALE — DECEMBER 1998

...\TS 01-Loop Detector-Installat 2/4/2004 10:37:45 AM