| STATE | PROJECT NUMBER | SHEET NO. | TOTAL SHEETS |
|---|---|---|---|
| GA. | NHS00-0004-00(290) | 86 | 189 |

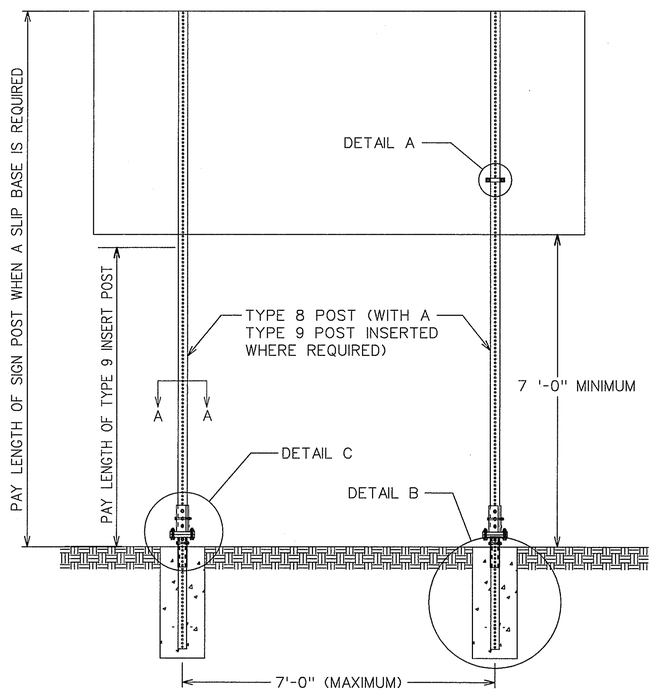


BACK VIEW

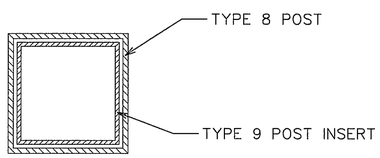


SECTION A-A

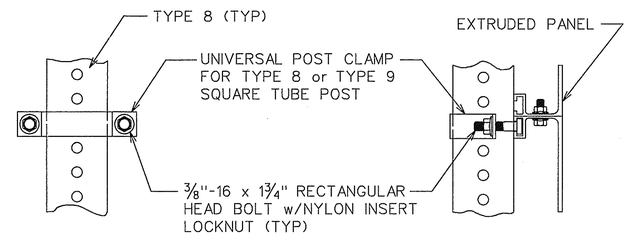


BACK VIEW SIDE VIEW

DETAIL A

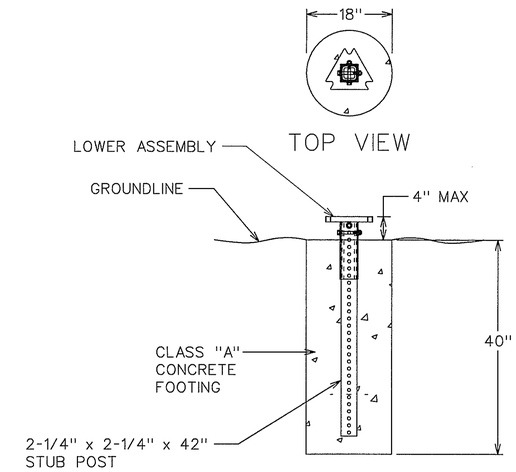


DETAIL B

GROUND MOUNTED BREAKAWAY SIGN SUPPORT

**SIGN POST SELECTION CHART**

70 MPH Wind Load Chart + 15% Gust Factor

| | SLIP BASE NOT REQUIRED | | | | GROUND MOUNTED BREAKAWAY SIGN SUPPORT REQUIRED | | | | |
|---|---|---|---|---|---|---|---|---|---|
| | TYPE 7 2" 14 ga. | | TYPE 9 2-1/4" 14 ga. | TYPE 8 2-1/2" 12 ga. | TYPE 8 2-1/2" 12 ga. | | TYPE 8 w/TYPE 9 Insert* 2-1/2" 12 ga. W/2-1/4" 14 ga. | | |
| Sign Centroid | 1 Post | 2 Post | 1 Post | 1 Post | 2 Post | 3 Post | 1 Post | 2 Post | 3 Post |
| | SQUARE FOOTAGE | | | | SQUARE FOOTAGE | | | | |
| 6' | 13.50 | 27.00 | 19.25 | 30.00 | 60.00 | 90.00 | 49.25 | 98.50 | 147.75 |
| 7' | 11.60 | 23.20 | 16.50 | 25.75 | 51.50 | 77.25 | 42.25 | 84.50 | 126.75 |
| 8' | 10.15 | 20.30 | 14.45 | 22.55 | 45.10 | 67.65 | 37.00 | 74.00 | 111.00 |
| 9' | 9.00 | 18.00 | 12.85 | 20.00 | 40.00 | 60.00 | 32.85 | 65.70 | 98.55 |
| 10' | 8.10 | 16.20 | 11.55 | 18.00 | 36.00 | 54.00 | 29.55 | 59.10 | 88.65 |
| 11' | 7.40 | 14.80 | 10.50 | 16.40 | 32.80 | 49.20 | 26.90 | 53.80 | 80.70 |
| 12' | 6.80 | 13.60 | 9.65 | 15.00 | 30.00 | 45.00 | 24.65 | 49.30 | 73.95 |
| 13' | 6.25 | 12.50 | 8.90 | 13.85 | 27.70 | 41.55 | 22.75 | 45.50 | 68.25 |
| 14' | 5.80 | 11.60 | 8.25 | 12.90 | 25.80 | 38.70 | 21.15 | 42.30 | 63.45 |
| 15' | 5.00 | 10.00 | 6.45 | 10.10 | 20.20 | 30.30 | 16.55 | 33.10 | 49.65 |
| 16' | 4.70 | 9.40 | 6.05 | 9.45 | 18.90 | 28.35 | 15.50 | 31.00 | 46.50 |
| 17' | 4.40 | 8.80 | 5.70 | 8.90 | 17.80 | 26.70 | 14.60 | 29.20 | 43.80 |
| 18' | 4.15 | 8.30 | 5.40 | 8.40 | 16.80 | 25.20 | 13.80 | 27.60 | 41.40 |
| 19' | 3.95 | 7.90 | 5.10 | 7.95 | 15.90 | 23.85 | 13.05 | 26.10 | 39.15 |
| 20' | 3.75 | 7.50 | 4.85 | 7.55 | 15.10 | 22.65 | 12.40 | 24.80 | 37.20 |

SIGN CENTROID IS DISTANCE FROM GROUND LEVEL TO BOTTOM OF SIGN *PLUS* HALF THE HEIGHT OF SIGN.
*EXAMPLE:* 24" X 48" SIGN THAT IS 7 FEET FROM GROUND TO BOTTOM OF SIGN. ADD HALF OF 48" (24" OR 2 FT) *PLUS* 7 FT. = 9' CENTROID.

SIGN PLATE SHALL NOT EXCEED 48" IN WIDTH ON A SINGLE POST.

* TYPE 9 INSERT SHALL BE A CONTINOUS POST INSERTED INTO THE TYPE 8 POST WHERE REQUIRED. THE INSERT POST SHALL EXTEND FROM THE BOTTOM OF THE SLIP BASE UPPER ASSEMBLY TO 4" BELOW THE BOTTOM OF THE SIGN. THE INSERT POST SHALL NOT EXTEND ABOVE THE BOTTOM OF THE SIGN. PAYMENT FOR THE INSERT POST SHALL BE PER LINEAR FOOT OF TYPE 9 POST.

GROUND MOUNTED BREAKAWAY SIGN SUPPORT WILL BE MEASURED AND PAID FOR SEPARATELY. THE COST FOR THIS WORK SHALL INCLUDE THE UPPER AND LOWER ASSEMBLY, STUB POST, CLASS "A" CONCRETE, ALL HARDWARE NECESSARY TO COMPLETE THE INSTALLATION, AND BE INCLUDED IN THE BID PRICE SUBMITTED FOR ITEM 636-3010.

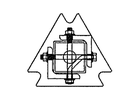

TOP VIEW

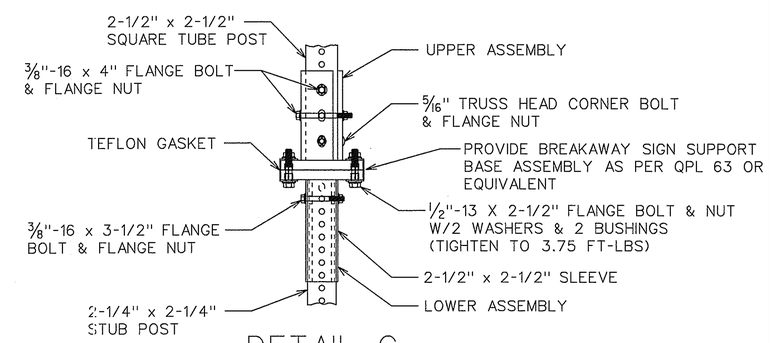


DETAIL C

(CONCRETE NOT SHOWN)

| DATE | REVISIONS |
|---|---|
| | |

GEORGIA DEPARTMENT OF TRANSPORTATION
OFFICE OF TRAFFIC SAFETY & DESIGN

DETAILS OF
SQUARE TUBE POST
(BREAKAWAY SIGN SUPPORT)

NO SCALE July 2002

PCBOTB

T-3B

...\t100bpost18.dgn Jul 03, 2003 16:10:11