STATE	PROJECT NUMBER	SHEET NO.	TOTAL SHEETS
GA		391	467

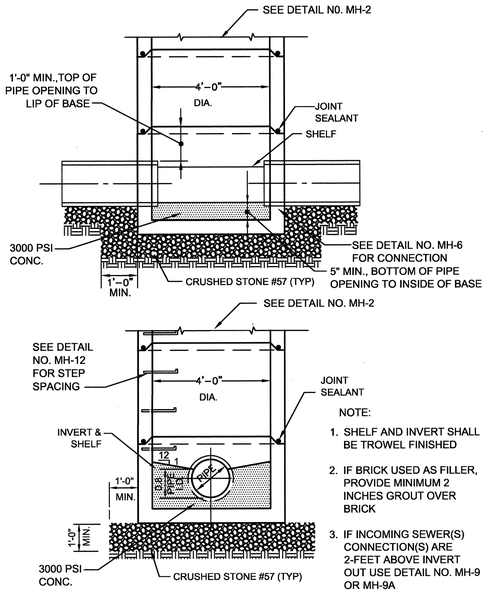

NOTE:

1. SHELF AND INVERT SHALL BE TROWEL FINISHED
2. IF BRICK USED AS FILLER, PROVIDE MINIMUM 2 INCHES GROUT OVER BRICK
3. IF INCOMING SEWER(S) CONNECTION(S) ARE 2-FEET ABOVE INVERT OUT USE DETAIL NO. MH-9 OR MH-9A

MH-1 MANHOLE BASE
NOT TO SCALE

1	MH-1 MANHOLE BASE
NTS	

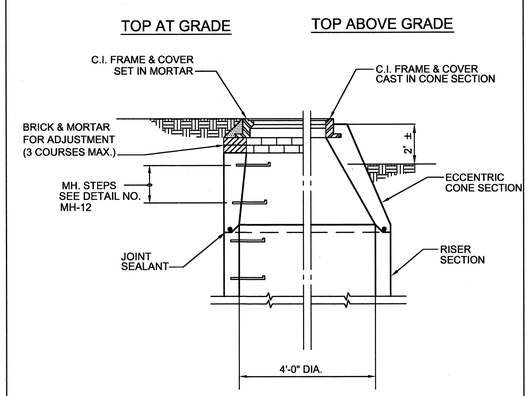

NOTE: FRAME & COVER SHALL BE CAST IN ALL CONE SECTIONS UNLESS FRAME & COVER IS TO BE FLUSH WITH FINAL GRADE.

MH-2 MANHOLE RISER AND CONE
NOT TO SCALE

2	MH-2 MANHOLE RISER AND CONE
NTS	

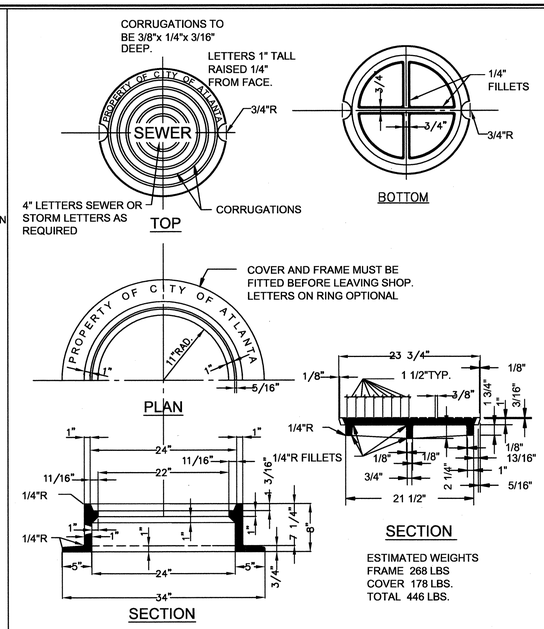

MH-4 SOLID MANHOLE FRAME AND COVER
NOT TO SCALE

3	MH-4 SOLID MANHOLE FRAME AND COVER
NTS	

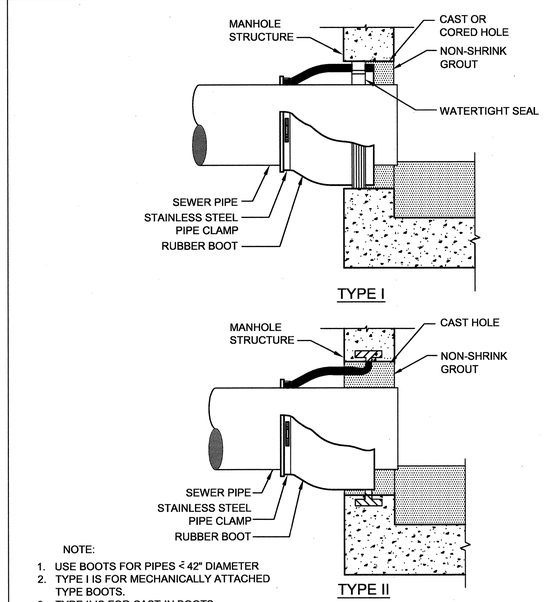

NOTE:

1. USE BOOTS FOR PIPES ≤ 42" DIAMETER
2. TYPE I IS FOR MECHANICALLY ATTACHED TYPE BOOTS.
3. TYPE II IS FOR CAST-IN BOOTS

MH-6 BOOT CONNECTION
NOT TO SCALE

4	MH-6 BOOT CONNECTION
NTS	

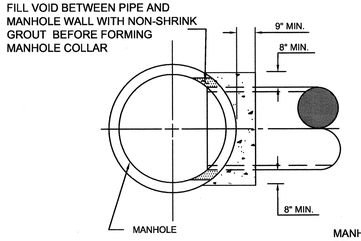

PLAN

MANHOLE COLLARS SHALL BE USED FOR SEWER CONNECTIONS TO MANHOLES :

1.) IF EXIST. MANHOLE IS BRICK
2.) IF SEWER > 42" Ø
3.) IF MANHOLE IS CONSTRUCTED OVER EXIST. SEWER
4.) TO REPAIR TYPE II BOOT CONNECTION

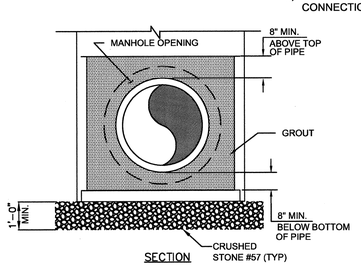

SECTION

MH-7 MANHOLE COLLAR
NOT TO SCALE

5	MH-7 MANHOLE COLLAR
NTS	

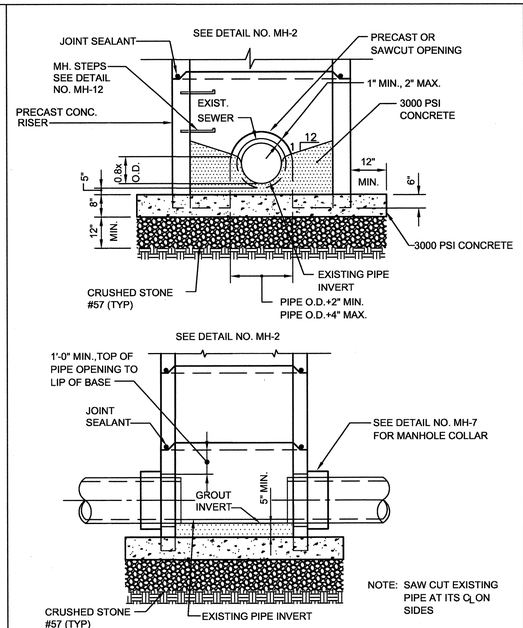

NOTE: SAW CUT EXISTING PIPE AT ITS ℄ ON SIDES

MH-10 MANHOLE OVER EXISTING SEWER
NOT TO SCALE

6	MH-10 MANHOLE OVER EXISTING SEWER
NTS	

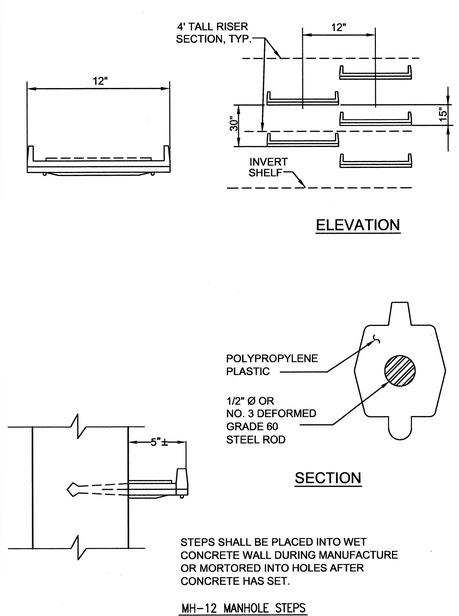

STEPS SHALL BE PLACED INTO WET CONCRETE WALL DURING MANUFACTURE OR MORTORED INTO HOLES AFTER CONCRETE HAS SET.

MH-12 MANHOLE STEPS
NOT TO SCALE

7	MH-12 MANHOLE STEPS
NTS	

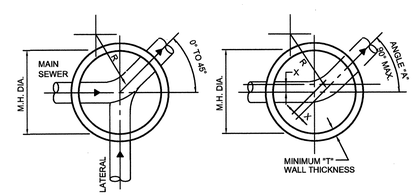

STANDARD MANHOLE SCHEDULE OF GOVERNING DIMENSIONS				
PIPE SIZE	ANGLE "A"	MH. DIA.	"T"	"X"
8" TO 15"	0° TO 90°	4'-0"	5"	0"

NOTE:
MINIMUM ℄ RADIUS (R) OF M.H. INVERT = 1.5 x PIPE DIAMETER

MH-13 MANHOLE PLAN AND DIAMETERS
NOT TO SCALE

8	MH-13 MANHOLE PLAN AND DIAMETERS
NTS	

NOTES:

1. CONNECTION TO NEW SEWER SHALL BE WITH TEE OR WYE.
2. NO TEES OR WYES ON SEWERS LARGER THAN 18" DIA.

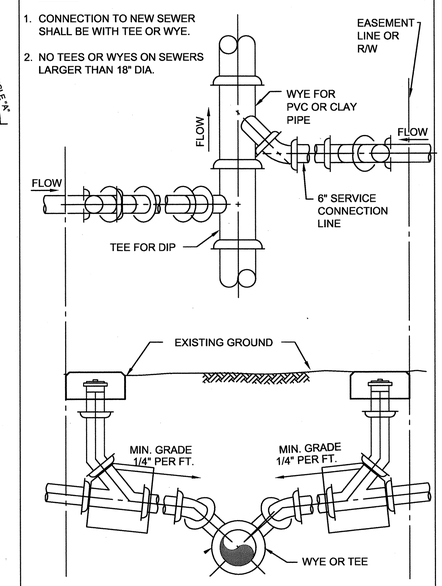

SS-1 SERVICE CONNECTION ON NEW SEWERS
NOT TO SCALE

9	SS-1 SERVICE CONNNECTION ON NEW SEWERS
NTS	

CITY OF ATLANTA
DEPARTMENT OF WATERSHED MANAGEMENT

Atlanta Gas Light Company

GEORGIA REGISTERED PROFESSIONAL ENGINEER
FRANK R WESTFALL
12/12/13

REVISION DATES		
0	3/8/12	INITIAL ISSUE
1	5/22/12	REVISION
2	8/27/12	REVISION

STATE OF GEORGIA
DEPARTMENT OF TRANSPORTATION
OFFICE:

SECTION 2
SEWER DETAILS 1
NORTHSIDE TRANSMISSION MAIN REPLACEMENT

DRAWING No.
44-029