STATE	PROJECT NUMBER	SHEET NO.	TOTAL SHEETS
GA.		1045	1236

DETAIL OF CATCH BASIN MODIFIED FOR DOUBLE GRATES

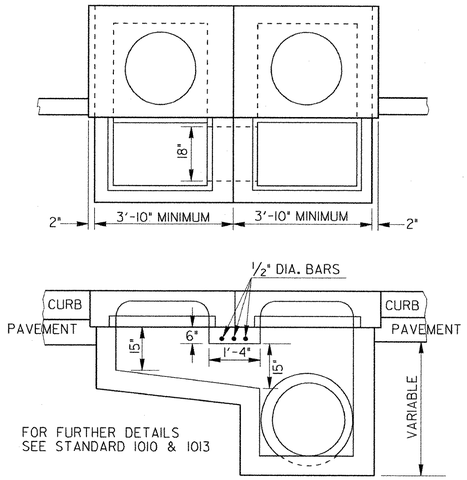

DETAIL OF DROP INLET MODIFIED FOR DOUBLE GRATES

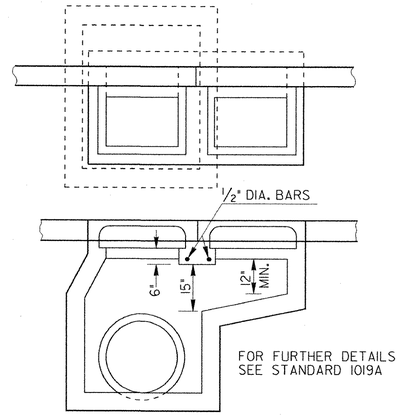

DETAIL OF CONCRETE SPRING BOX

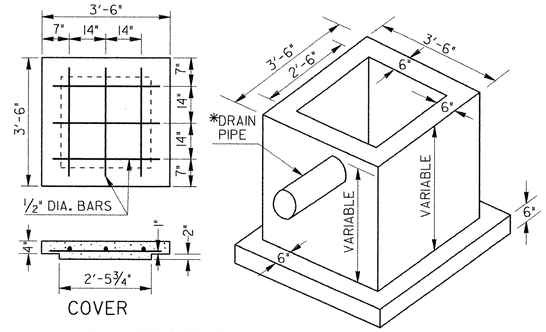

NOTE: SPRING BOX TO BE CONSTRUCTED OF CLASS "A" CONCRETE.

*DRAIN PIPE SHALL BE 6" PERFORATED UNDERDRAIN PIPE, EXCEPT WHERE OTHERWISE SPECIFIED. (2" GALV. PIPE USED ONLY IN SPECIAL CASES.) PAYMENT FOR SPRING BOX INCLUDES 1'-6" MIN. LENGTH OF DRAIN PIPE. ANY ADDITIONAL PIPE REQUIRED SHALL BE PAID FOR SEPARATELY.

DETAIL OF CONCRETE STEPS

NOTE:
BASIS OF PAYMENT SHALL BE CLASS "B" CONC. INCL. REINF. STEEL UNLESS OTHERWISE SPECIFIED.

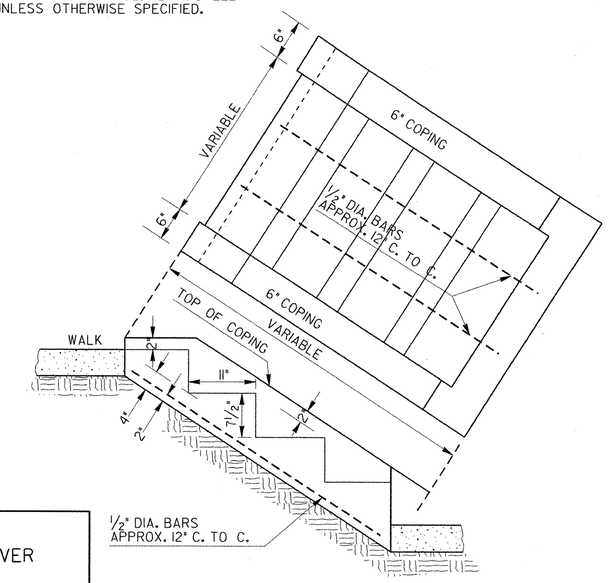

NOTE: RISE AND TREAD ARE TO BE ADJUSTED TO FIT SLOPE. RISE NOT TO EXCEED 8".

DETAILS OF CATCH BASIN OR DROP INLET CONNECTION TO CONCRETE BOX CULVERT

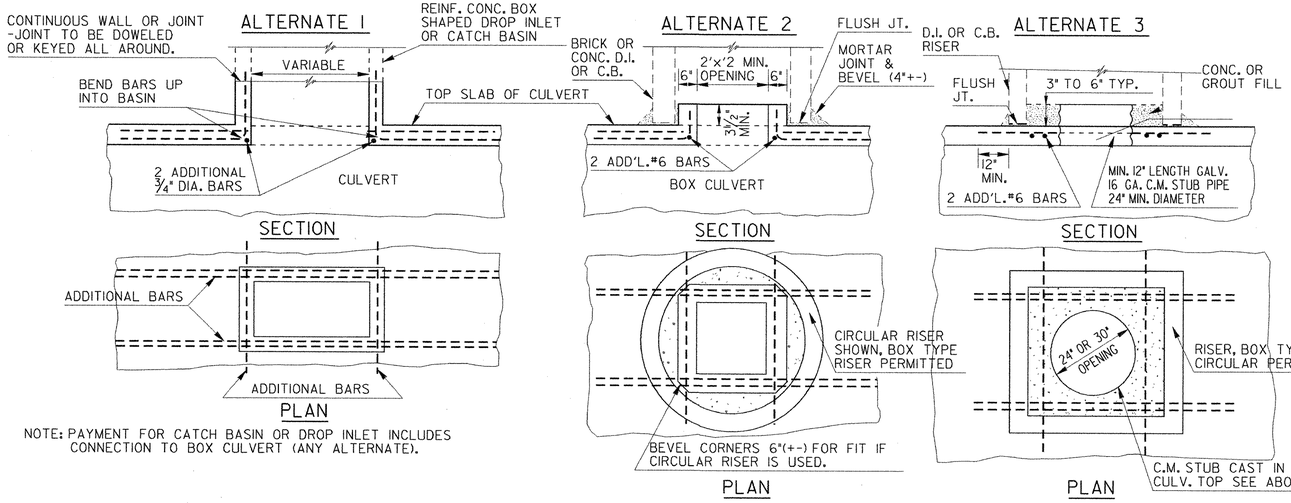

NOTE: PAYMENT FOR CATCH BASIN OR DROP INLET INCLUDES CONNECTION TO BOX CULVERT (ANY ALTERNATE).

DETAILS FOR CAPPING EXISTING DROP INLET WITH CONCRETE COVER

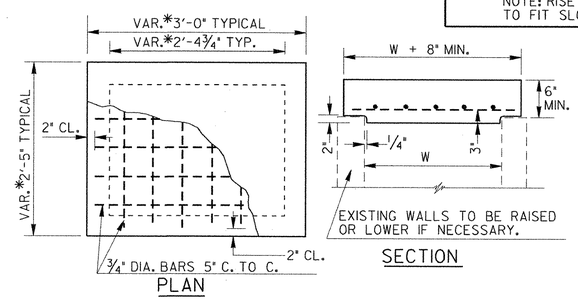

NOTE:
CONCRETE COVER SHOWN IS FOR USE IN CAPPING MINOR STRUCTURE WHERE CONVERSION FROM DROP INLET TO JUNCTION BOX IS DESIRED, SEE STD. 1011A REINFORCED CONCRETE COVER FOR CONVERSION TO MANHOLE.

* DIMENSIONS INDICATED ABOVE ARE TYPICAL FOR APPLICATION WITH STD. 1019A DROP INLET AND WILL VARY ACCORDING TO STRUCTURE; HOWEVER, NO INSIDE DIMENSION SHOULD EXCEED 4'-0" WITHOUT STRUCTURAL REVIEW. INLET DIMENSIONS SHOULD BE DETERMINED PRIOR TO CASTING CONC. COVER.

NOTE: IF STRUCTURE IS TO BE UNDER TRAFFIC AND DOES NOT HAVE ONE FT. MIN. CLEARANCE TO SUBBASE, THE SLAB THICKNESS SHALL BE INCREASED BY 4" AND THE REBARS SIZE INCREASES FROM 3/4" DIA. TO 1" DIA.

G.J.P.	REDRAWN	BY	DATE
R.M.U.	RET. WALL "H" TABLE ADDED	R.M.U.	6-30-98
	ADD PIPE PLUG DETAILS		4-30-84
	REVISION		2-15-83

DEPARTMENT OF TRANSPORTATION
STATE OF GEORGIA

STANDARD
DETAILS OF: CATCH BASIN MODIFIED FOR DOUBLE GRATE, DROP INLET MODIFIED FOR DOUBLE GRATE, CONCRETE SPRING BOX, CONCRETE STEPS, CATCH BASIN OR DROP INLET CONNECTION TO CONCRETE BOX CULVERT CAPPING EXISTING DROP INLET

NO SCALE: REV. & REDR. DECEMBER, 1982

REV. & R.M.U. (SUBMITTED)
REDR. STATE ROAD & AIRPORT DESIGN ENGR.
TRA. G.M.E. (APPROVED)
CHK. R.K.C. CHIEF ENGINEER

NUMBER 9031L
SHEET 2 OF 2