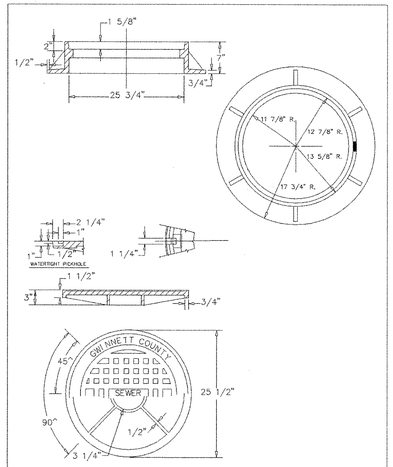

NOTE: VULCAN V-2357 OR INTERCHANGEABLE.

GWINNETT COUNTY DEPARTMENT OF PUBLIC UTILITIES

JOB TITLE	SHEET TITLE	DRN. BY: STF	REV. NO.	BY	DATE
STANDARD DRAWING SEWER	TRAFFIC FRAME & COVER	CKD BY:			
		APPD. BY:			
		DATE: 03-04-04			
	JOB NO. DWG. NO. S-9	SCALE: N.T.S.			

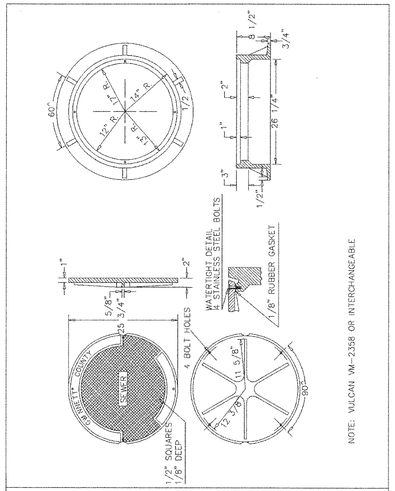

GWINNETT COUNTY DEPARTMENT OF PUBLIC UTILITIES

JOB TITLE	SHEET TITLE	DRN. BY: STF	REV. NO.	BY	DATE
STANDARD DRAWING SEWER	BOLT DOWN FRAME & COVER	CKD BY:			
		APPD. BY:			
		DATE: 2-1-99			
	JOB NO. DWG. NO. S-16	SCALE: N.T.S.			

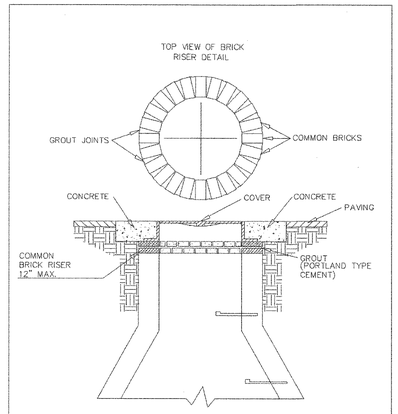

NOTE :
BRICK SHALL BE USER WHEN UPWARD ADJUSTMENTS TO FINISHED GRADE ARE REQUIRED.

GWINNETT COUNTY DEPARTMENT OF PUBLIC UTILITIES

JOB TITLE	SHEET TITLE	DRN. BY: STF	REV. NO.	BY	DATE
STANDARD DRAWING SEWER	LID GROUTING DETAIL	CKD BY:			
		APPD. BY:			
		DATE: 2-1-99			
	JOB NO. DWG. NO. S-11	SCALE: N.T.S.			

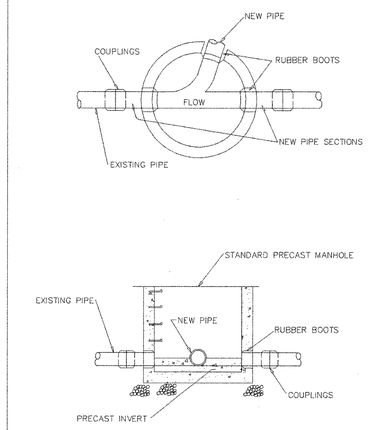

GWINNETT COUNTY DEPARTMENT OF PUBLIC UTILITIES

JOB TITLE	SHEET TITLE	DRN. BY: STF	REV. NO.	BY	DATE
STANDARD DRAWING SEWER	MANHOLE PLACED ON EXISTING LINE	CKD BY:			
		APPD. BY:			
		DATE: 2-1-99			
	JOB NO. DWG. NO. S-12	SCALE: N.T.S.			

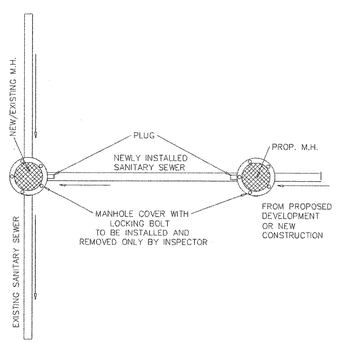

NOTE

1. FIRST SECTION OF SEWER LINE SHALL BE ISOLATED FROM THE REST OF THE PROPOSED SYSTEM.

2. THE FIRST MANHOLE OF THE PROPOSED SYSTEM SHALL BE USED TO PUMP OUT ANY INFLOW/ INFILTRATION, MUD, ETC., THAT ENTERED DURING INSTALLATION.

3. THE PLUGS SHALL NOT BE REMOVED UNTIL APPROVAL OF PROPOSED SEWER SYSTEM BY GWINNETT COUNTY INSPECTORS.

GWINNETT COUNTY DEPARTMENT OF PUBLIC UTILITIES

JOB TITLE	SHEET TITLE	DRN. BY: STF	REV. NO.	BY	DATE
STANDARD DRAWING SEWER	PLUG LOCATION DETAIL	CKD BY:			
		APPD. BY:			
		DATE: 2-1-99			
	JOB NO. DWG. NO. S-21	SCALE: N.T.S.			

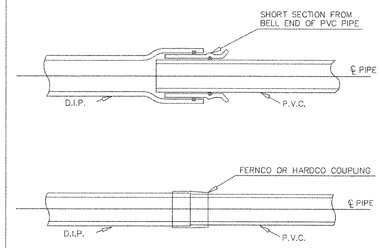

NOTES:

TRANSITION JOINTS: THE FOLLOWING SHALL BE UTILIZED FROM DUCTILE IRON PIPE TO P.V.C FOR PIPE SIZES LESS THAN 12"

1) WATER MAIN TYPE COMPRESSION COUPLINGS (WITH ADAPTER GASKETS IF NEEDED)
2) "FERNCO" TYPE COUPLINGS WITH STAINLESS STEEL SHEAR BANDS
3) HARDCO ADAPTER ASTM 31.39
4) SHALL BE CONSTRUCTED AS SHOWN IN THE DETAIL

GWINNETT COUNTY DEPARTMENT OF PUBLIC UTILITIES

JOB TITLE	SHEET TITLE	DRN. BY: STF	REV. NO.	BY	DATE
STANDARD DRAWING SEWER	TRANSITION COLLAR	CKD BY:			
		APPD. BY:			
		DATE: 2-1-99			
	JOB NO. DWG. NO. S-22	SCALE: N.T.S.			

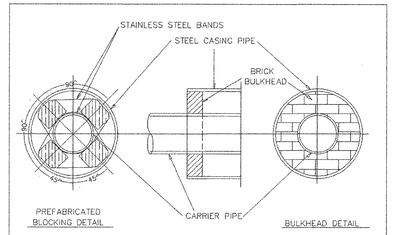

NOTES:

1. BLOCKING SHALL BE UTILIZED WHEN REQUIRED BY GCDPU AND ANYTIME THAT CASING I.D. IS 6" OR LARGER THAN CARRIER BELL.
2. CASING PIPE UP TO 20" SHALL HAVE A THICKNESS OF .375 INCH
3. CASING PIPE OVER 20" SHALL HAVE A THICKNESS OF .5 INCH
4. PREFABRICATED BLOCKING SECURED AT BELL END OF EACH JOINT OF CARRIER PIPE
5. BLOCKING MUST BE SECURED WITH STAINLESS STEEL BANDS OR AS PER THE MANUFACTURER'S RECOMMENDATIONS

GWINNETT COUNTY DEPARTMENT OF PUBLIC UTILITIES

JOB TITLE	SHEET TITLE	DRN. BY: STF	REV. NO.	BY	DATE
STANDARD DRAWING WATER/SEWER	AUGERED JACKED CASING DETAIL	CKD BY:			
		APPD. BY:			
		DATE: 2-1-99			
	JOB NO. DWG. NO. S-25	SCALE: N.T.S.			

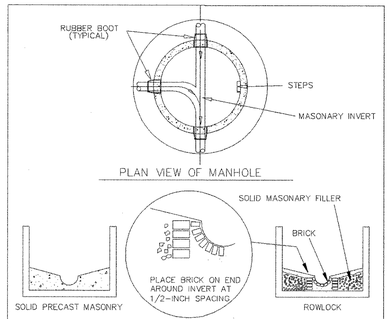

NOTE:

1. PRECAST INVERTS ARE ACCEPTABLE (NO FIELD MODIFICATIONS ALLOWED)
2. ENSURE A 0.2 FOOT DROP ACROSS INVERT
3. FIELD INSTALLED INVERTS MUST BE ROWLOCK
4. INVERTS FOR MANHOLES RECEIVING FORCEMAINS SHALL BE SIMILARLY CONSTRUCTED
5. NO FIELD-MODIFICATION OF PRE-CAST INVERTS ALLOWED

PIPE SIZE	DEFLECTION	MIN. MH DIA.
8" & 10"	0° – 90°	4' – 0"
18"	0° – 60°	4' – 0"
18"	60° – 90°	5' – 0"
21" & 24"	0° – 60°	5' – 0"
21" & 24"	60° – 90°	6' – 0"

GWINNETT COUNTY DEPARTMENT OF PUBLIC UTILITIES

JOB TITLE	SHEET TITLE	DRN. BY: STF	REV. NO.	BY	DATE
STANDARD DRAWING SEWER	STANDARD INVERT DETAILS	CKD BY:			
		APPD. BY:			
		DATE: 03-04-04			
	JOB NO. DWG. NO. S-8	SCALE: N.T.S.			

GWINNETT COUNTY DEPARTMENT OF WATER RESOURCES
684 WINDER HIGHWAY
LAWRENCEVILLE, GEORGIA 30045
PHONE: (678) 376-6700

COLUMBIA ENGINEERING
2763 Meadow Church Road, Suite 100
Duluth, Georgia 30097
Phone: (770) 925-0357
Fax: (770) 925-0565

REVISION DATES		

STATE OF GEORGIA
DEPARTMENT OF TRANSPORTATION

OFFICE:

UTILITY RELOCATION PLANS

CONSTRUCTION DETAILS

DRAWING No. 44-31