STATE	PROJECT NUMBER	SHEET NO.	TOTAL SHEETS
GA.	MSL00-0004-00(086)	083	1236

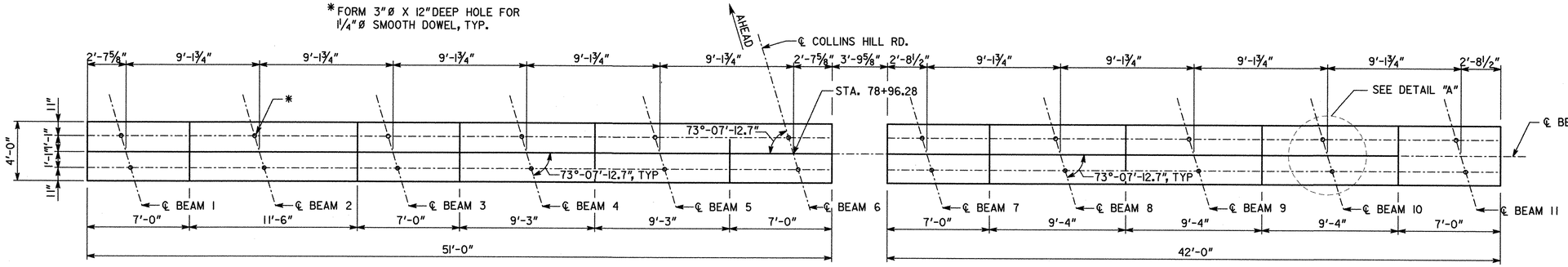

PLAN

TABLE A			
LEFT		RIGHT	
LOCATION	ELEVATION	LOCATION	ELEVATION
EL A	1083.24	EL A	1083.87
EL B	1083.36	EL B	1083.74
EL C	1083.41	EL C	1083.66
EL D	1083.77	EL D	1083.20
EL E	1083.82	EL E	1083.12
EL F	1083.94	EL F	1082.99
BEAM 1 AHD	1088.06	BEAM 7 AHD	1088.56
BK	1088.00	BK	1089.41
BEAM 2 AHD	1088.20	BEAM 8 AHD	1088.34
BK	1088.14	BK	1089.20
BEAM 3 AHD	1088.34	BEAM 9 AHD	1088.13
BK	1089.20	BK	1088.98
BEAM 4 AHD	1088.48	BEAM 10 AHD	1087.92
BK	1089.34	BK	1088.77
BEAM 5 AHD	1088.63	BEAM 11 AHD	1087.70
BK	1089.48	BK	1087.64
BEAM 6 AHD	1088.73		
BK	1089.59		

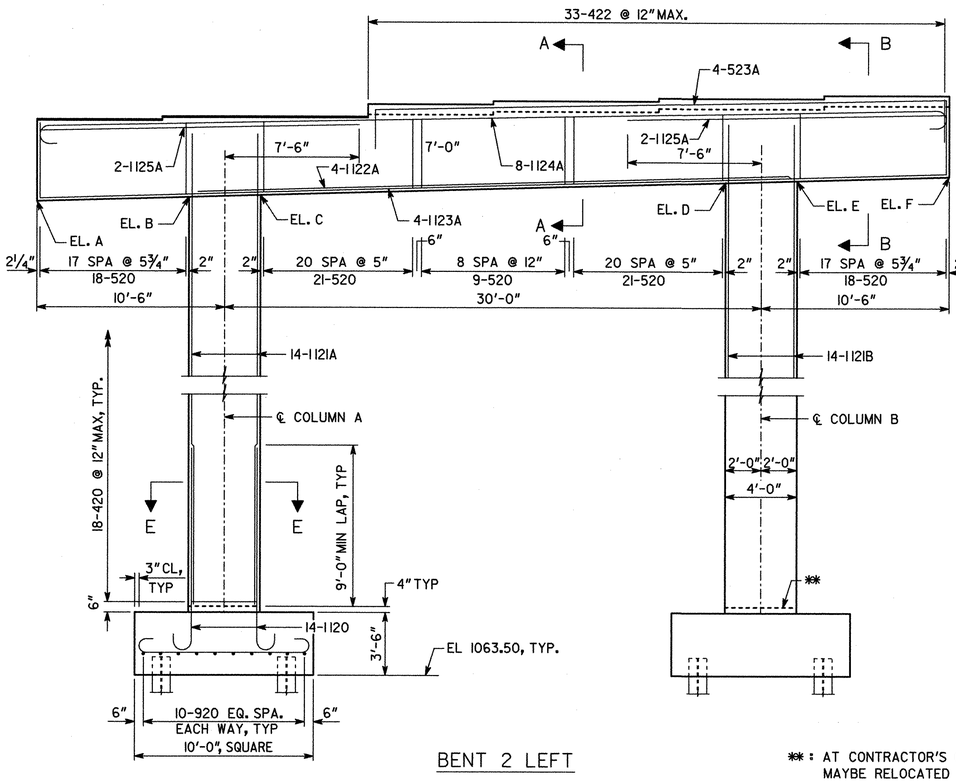

BENT 2 LEFT

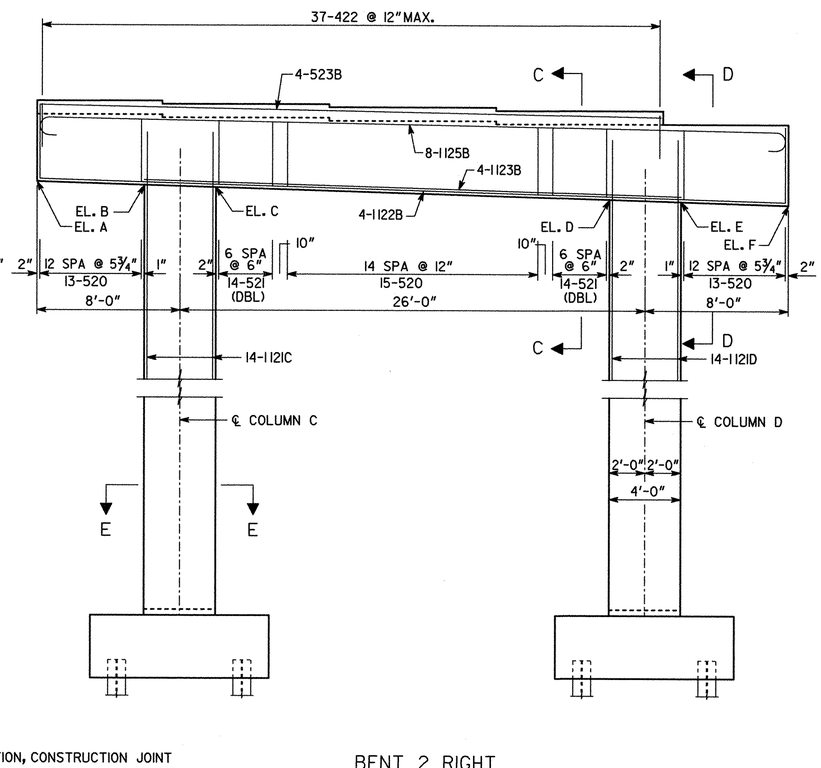

BENT 2 RIGHT

** : AT CONTRACTOR'S OPTION, CONSTRUCTION JOINT MAYBE RELOCATED TO THE TOP OF FOOTING, TYP.

ELEVATION
(LOOKING AHEAD)

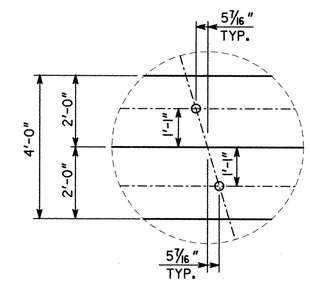

DETAIL "A"
N.T.S.

NOTES:

1. MAINTAIN 2" CL. ON ALL REINFORCEMENT UNLESS OTHERWISE NOTED.
2. SEE BRIDGE SHEET "INTERMEDIATE BENT DETAILS" FOR COLUMN SECTION, CAP DETAILS, FOOTING PLAN AND QUANTITIES.

ALL PILES SHALL BE STEEL, HP 14X73

PLAN DRIVING OBJECTIVE

ALL PILES SHALL BE DRIVEN TO A DRIVING RESISTANCE OF 96 TONS AFTER A MINIMUM TIP ELEVATION OF 1039 IS ACHIEVED.

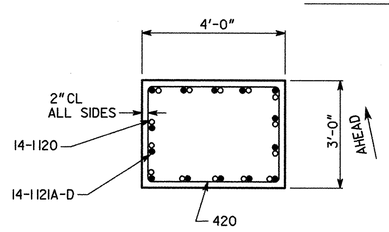

SECTION E-E
SCALE: ½" = 1'-0"

NOTE: DO NOT PLACE 1120 BARS IN CORNERS.

BRIDGE NO. 7

GEORGIA
DEPARTMENT OF TRANSPORTATION
PRECONSTRUCTION DIVISION-OFFICE OF BRIDGE DESIGN

INTERMEDIATE BENT 2
COLLINS HILL RD. OVER SR 316
GWINNETT COUNTY MSL00-0004-00(086)

SCALE: ¼" = 1'-0" OCTOBER 2010

DRAWING NO. 35-016
BRIDGE SHEET 16 OF 24

REVISIONS | DATE | BY

DESIGNED AOC | CHECKED DRB | REVIEWED WMD/WEI
DRAWN CAB | DESIGN GROUP X | APPROVED PVL

1 INCH WHEN PRINTED FULL SIZE

5/6/2011
h:\d06192 (sr 316 bay)\phase 1\collins hill rd\b1 2.dgn