STATE	PROJECT NUMBER	SHEET NO.	TOTAL SHEETS
GA.	MSL00-0004-00(086)	881	1236

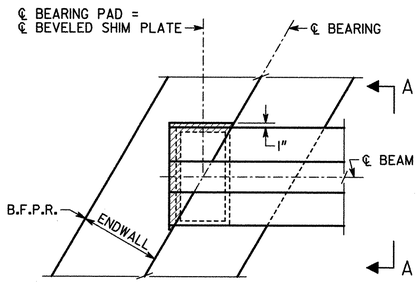

PLAN
BENT 1 SHOWN
BENT 5 SIMILAR

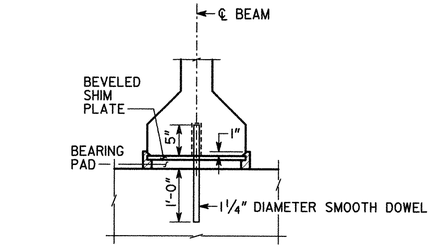

PREFORMED FOAM JOINT FILLER SHALL BE IN ACCORDANCE WITH SUB-SECTION 833.2.10 OF THE GEORGIA DOT SPECIFICATIONS.

ENDWALL NOT SHOWN

SECTION A-A

NOTES

1) BEARING PADS HAVE BEEN DESIGNED ACCORDING TO AASHTO SPECIFICATIONS DIVISION I, SECTION 14.6.6 AND SHALL BE FURNISHED IN ACCORDANCE WITH AASHTO SPECIFICATIONS DIVISION II, SECTION 18, BEARINGS.

2) 1 1/4" DIAMETER SMOOTH DOWELS SHALL BE ASTM A 709 GRADE 36.

3) BEARING PADS SHALL BE MADE OF 60 DUROMETER HARDNESS NEOPRENE, GRADE 2 OR HIGHER.

4) 3" DIAMETER HOLE IN BEARING PADS MAY BE FORMED OR DRILLED.

5) BEARING PADS SHALL HAVE 1/4" COVER ON THE TOP, BOTTOM, AND SIDES AND AROUND THE HOLE.

6) 3/16" LOAD PLATES AND 14 GAGE INTERNAL PLATE(S) (IF REQUIRED) SHALL BE ASTM A 709 GRADE 36 OR ASTM A 1011 GRADE 36.

7) NUMBER OF INTERNAL PLATES SHOWN FOR ILLUSTRATION PURPOSES ONLY. THE NUMBER OF INTERNAL PLATE(S) SPECIFIED SHALL BE EQUALLY SPACED BETWEEN LOAD PLATES.

8) USE OF 1 1/2° MOLD DRAFT IS OPTIONAL.

9) BEVELED SHIM PLATES SHALL BE ASTM A 709 GRADE 36 AND SHALL BE GALVANIZED IN ACCORDANCE WITH ASTM A 123.

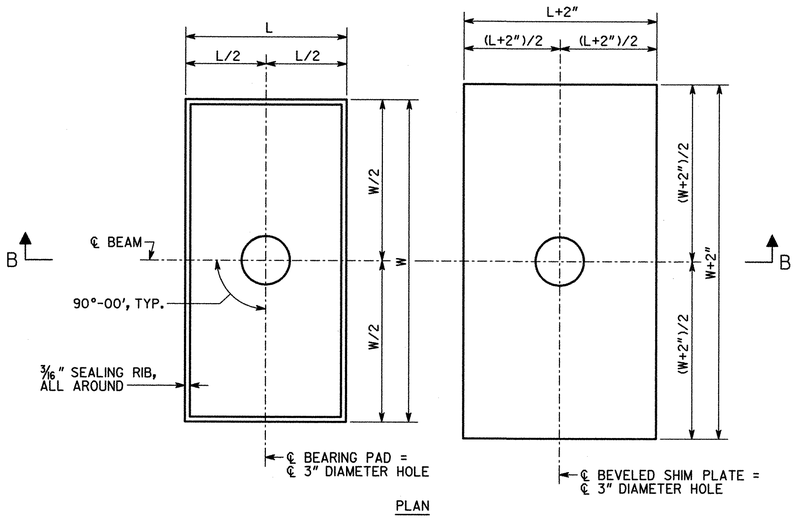

PLAN

BENT	BEAM	BEARING PADS								BEVELED SHIM PLATES	
							DESIGN LOADS (KIPS)				
		W	L	T	NUMBER OF INTERNAL PLATE(S)	DESIGN SHEAR DEFLECTION	DEAD LOAD	LIVE LOAD (NO IMPACT)	DEAD LOAD + LIVE LOAD	T_1	T_2
1	1, 2 & 11	22"	10"	1 5/8"	1	9/16	109.2	58.7	167.9	1/4	1/2
1	3 - 10	18"	10"	1 5/8"	1	9/16	100.3	58.7	158.9	1/4	1/2
2 BK	1, 2 & 11	22"	10"	1 5/8"	1	5/16	102.8	58.7	161.4	1/4	1/2
2 BK	3 - 10	18"	10"	1 5/8"	1	5/16	95.7	58.7	154.4	1/4	1/2
2 AH	1 - 11	22"	10"	1 5/8"	1	5/16	130.4	60.9	191.3	-	-
3 BK	1 - 11	22"	10"	1 5/8"	1	0	130.4	60.9	191.3	-	-
3 AH	1 - 11	22"	10"	1 5/8"	1	0	130.4	60.9	191.3	-	-
4 BK	1 - 11	22"	10"	1 5/8"	1	5/16	130.4	60.9	191.3	-	-
4 AH	1, 2 & 11	22"	10"	1 5/8"	1	5/16	87.8	56.9	144.7	-	-
4 AH	3 - 10	18"	10"	1 5/8"	1	5/16	81.8	56.9	138.8	-	-
5	1, 2 & 11	22"	10"	1 5/8"	1	1/2	94.2	56.9	151.1	-	-
5	3 - 10	18"	10"	1 5/8"	1	1/2	86.4	56.9	143.3	-	-

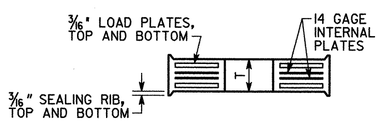

SECTION B-B

BEARING PAD

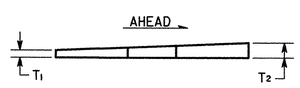

BEVELED SHIM PLATE

BRIDGE NO. 7

GEORGIA
DEPARTMENT OF TRANSPORTATION
PRECONSTRUCTION DIVISION-OFFICE OF BRIDGE DESIGN

BEARING PAD DETAILS
COLLINS HILL RD. OVER SR 316
GWINNETT COUNTY MSL00-0004-00(086)

SCALE: NONE OCTOBER 2010

DRAWING NO. 35-014
BRIDGE SHEET 14 OF 24

REVISIONS | DATE | BY

DESIGNED AOC | CHECKED DRB | REVIEWED WMD/WEI
DRAWN CAB | DESIGN GROUP X | APPROVED PVL

1 INCH WHEN PRINTED FULL SIZE

5/6/2011
I:\456892 ga 316 hov\phase 1\collins hill\final\bearing.dgn