STATE	PROJECT NUMBER	SHEET NO.	TOTAL SHEETS
GA.	MSL00-0004-00(086)	875	1236

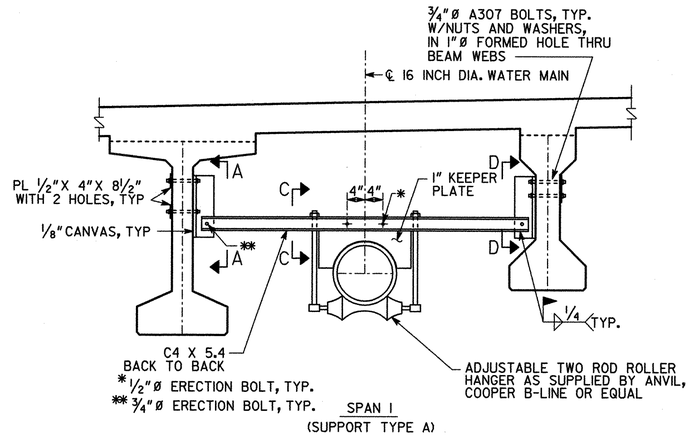

SPAN 1
(SUPPORT TYPE A)

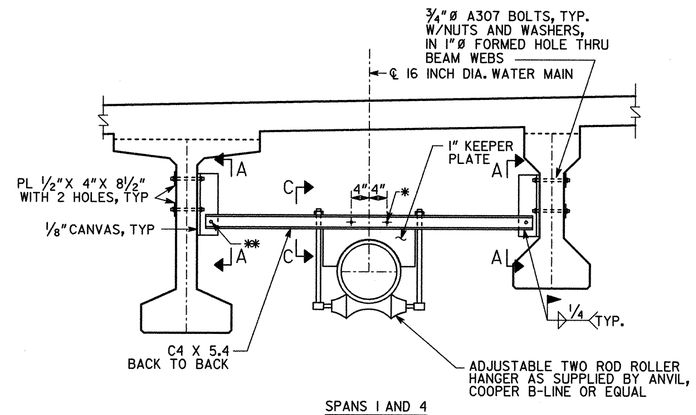

SPANS 1 AND 4
(SUPPORT TYPE B)

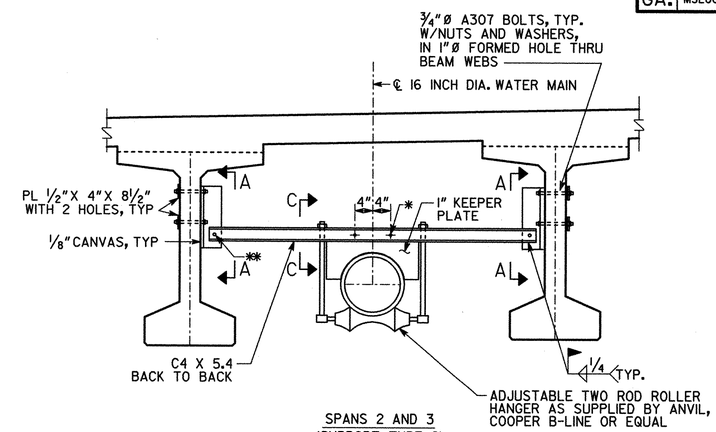

SPANS 2 AND 3
(SUPPORT TYPE C)

WATER MAIN HANGER DETAILS

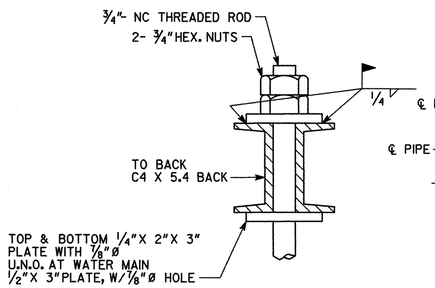

SECTION C-C

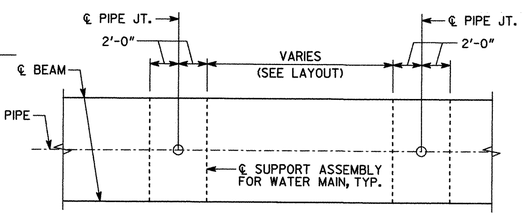

DETAIL "A"

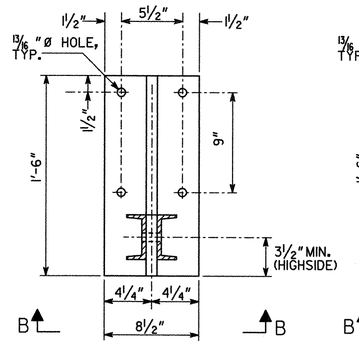

SECTION A-A

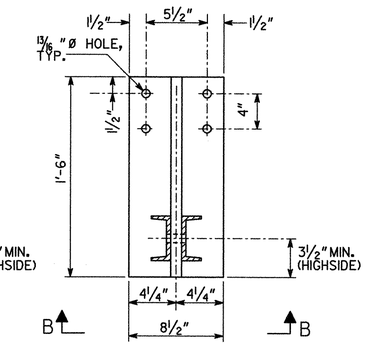

SECTION D-D

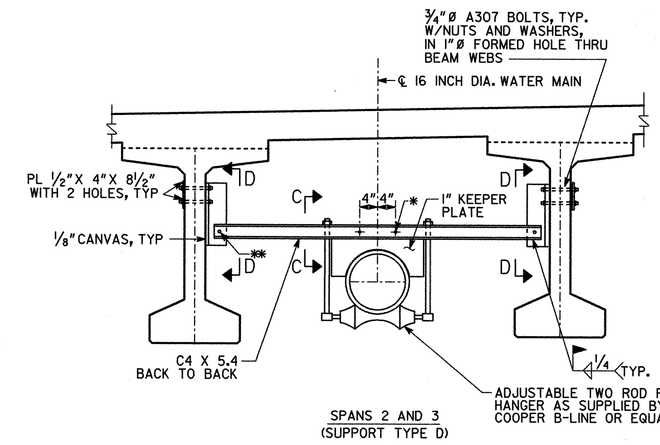

SPANS 2 AND 3
(SUPPORT TYPE D)

WATER MAIN HANGER NOTES

1. ALL FERROUS METAL COMPONENTS IN THE HANGER ASSEMBLY SHALL BE GALVANIZED IN ACCORDANCE WITH SUB-SECTION 858-2-02.B OF THE GEORGIA DOT SPECIFICATIONS PRIOR TO INSTALLATION.
2. STEEL SHALL BE A-709, GR. 36.
3. THE CONTRACTOR SHALL SEAL ALL VOIDS IN OPENINGS IN ENDWALLS.
4. PLACE CANVAS AS PER SUB-SECTION 501.3.05.C.1.D OF THE GEORGIA DOT SPECIFICATIONS BETWEEN SUPPORT PLATES AND BEAM WEBS.

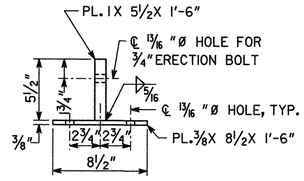

SECTION B-B

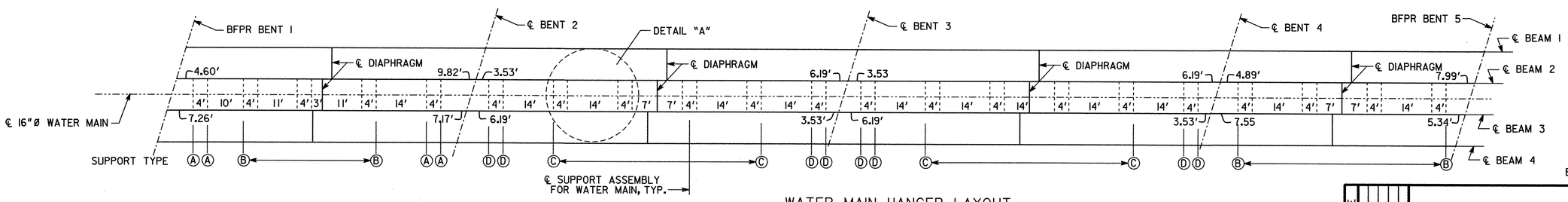

WATER MAIN HANGER LAYOUT

BRIDGE NO. 7

PBS&J

GEORGIA
DEPARTMENT OF TRANSPORTATION
PRECONSTRUCTION DIVISION-OFFICE OF BRIDGE DESIGN

WATER MAIN SUPPORT DETAILS
COLLINS HILL RD. OVER SR 316
GWINNETT COUNTY MSL00-0004-00(086)

DATE	REVISIONS	BY

DRAWING NO. 35-008
BRIDGE SHEET 8 OF 24

SCALE: NONE — OCTOBER 2010

DESIGNED AOC — CHECKED DRB — REVIEWED WMD/WEI
DRAWN CAB — DESIGN GROUP X — APPROVED PVL

1 INCH WHEN PRINTED FULL SIZE

5/6/2011
i:\s36192.tsr\36 hov\phase 1\collins hill\find\uf11_fr.dgn