STATE	PROJECT NUMBER	SHEET NO.	TOTAL SHEETS
GA.	MSL00-0004-00(086)	873	1236

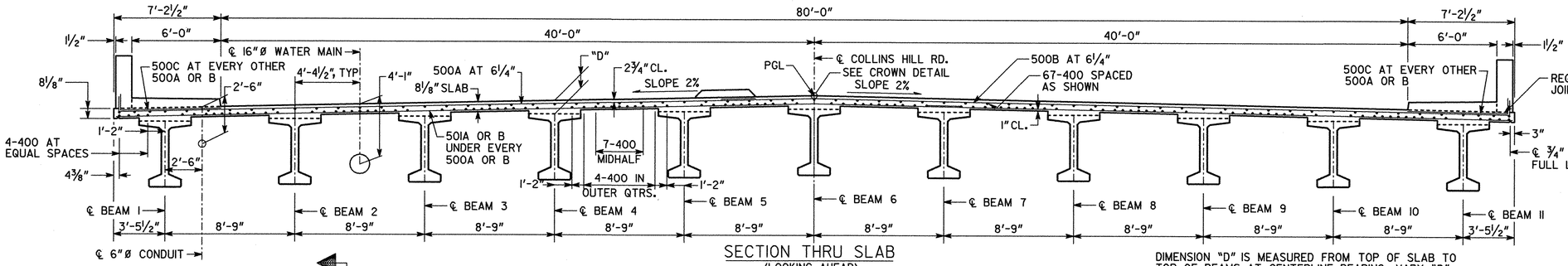

SECTION THRU SLAB
(LOOKING AHEAD)

NOTE:
FOR MEDIAN TRANSITION SEE BRIDGE SHEET "DECK PLAN - SPANS 2 AND 3".

DIMENSION "D" IS MEASURED FROM TOP OF SLAB TO TOP OF BEAMS AT CENTERLINE BEARING. VARY "D" BETWEEN BEARINGS TO COMPENSATE FOR DEAD LOAD DEFLECTION AND VERTICAL CURVE. MAINTAIN A CONSTANT A CONSTANT SLAB THICKNESS OF 8⅛"
"D"= 10¼"

MIN. LAP LENGTH:

	TOP BARS
#4 BARS = 1'-9"	2'-6"
#5 BARS = 2'-2"	3'-0"
#8 BARS = 4'-7"	6'-4"

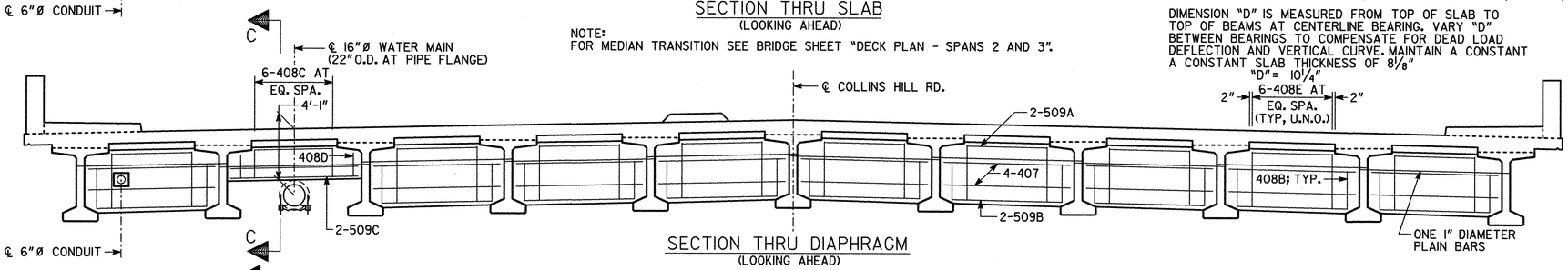

SECTION THRU DIAPHRAGM
(LOOKING AHEAD)

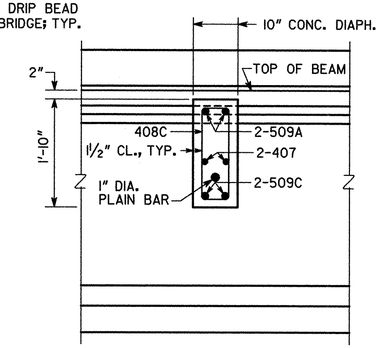

SECTION C-C

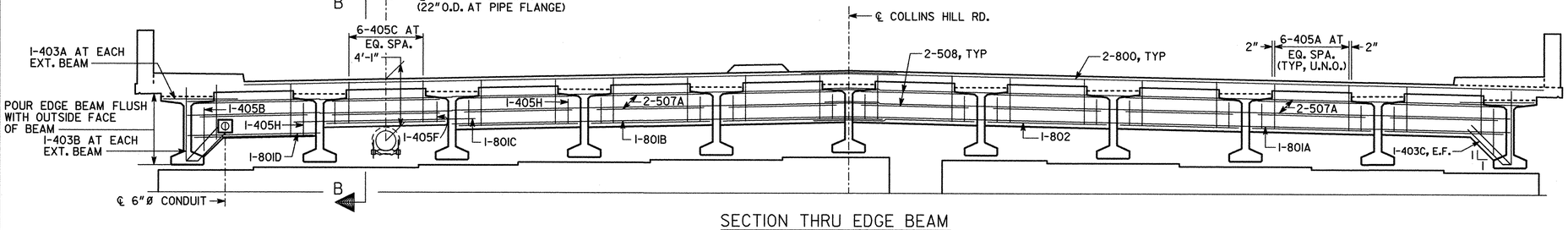

SECTION THRU EDGE BEAM
(BENTS 2 AND 4)
(LOOKING AHEAD)

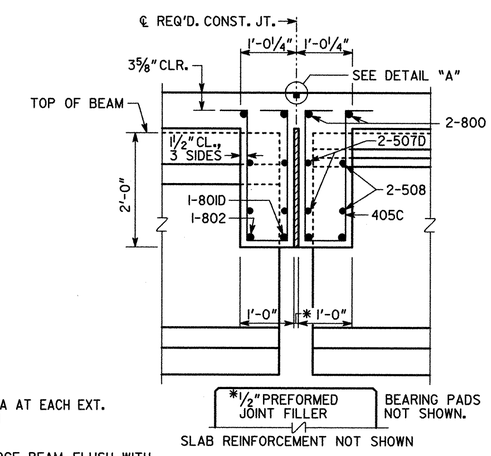

SECTION D-D

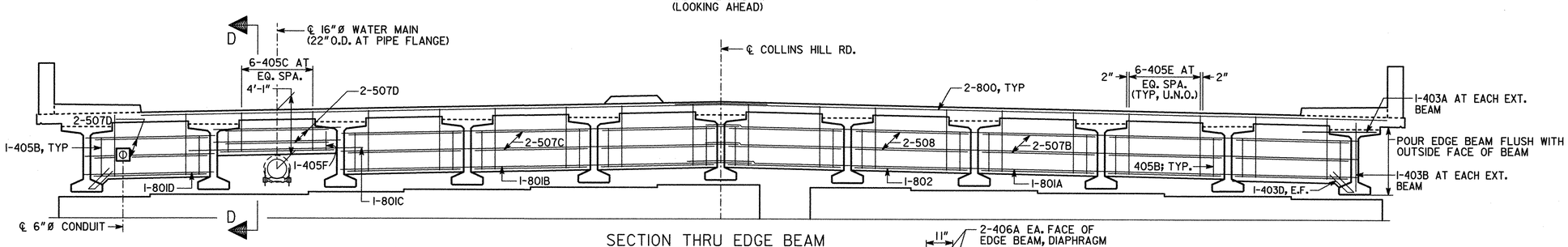

SECTION THRU EDGE BEAM
(BENT 3)
(LOOKING AHEAD)

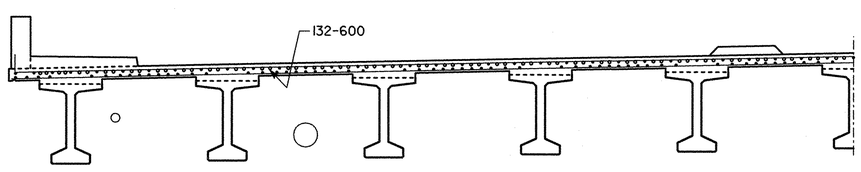

SECTION THRU SLAB AT INTERMEDIATE BENT
(LOOKING AHEAD)

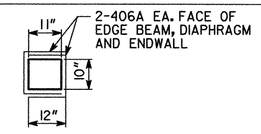

6"Ø PIPE
N.T.S.

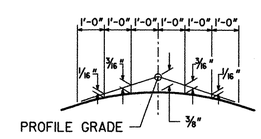

CROWN DETAIL
2% CROSS SLOPE

NOTES:

1. SEE BRIDGE SHEET "DECK SECTIONS SPAN 1 AND 4" FOR SECTION B-B.
2. SEE BRIDGE SHEET "SUPERSTRUCTURE DETAILS" FOR DETAIL "A".
3. FORM 11" X 10" BLOCKOUT THRU DIAPHRAGM AND EDGE BEAM FOR 6" Ø CONDUIT. SHIFT AND/OR CUT REINF. TO CLEAR BLOCKOUTS.

BRIDGE NO. 7

GEORGIA
DEPARTMENT OF TRANSPORTATION
PRECONSTRUCTION DIVISION-OFFICE OF BRIDGE DESIGN

DECK SECTIONS SPANS 2 AND 3
COLLINS HILL RD. OVER SR 316
GWINNETT COUNTY MSL00-0004-00(086)

SCALE: ¼"= 1'-0" OCTOBER 2010

DRAWING NO.	REVISIONS	DATE	BY
35-006			
BRIDGE SHEET 6 OF 24			

DESIGNED AOC | CHECKED DRB | REVIEWED WMD/WEI
DRAWN CAB | DESIGN GROUP X | APPROVED PVL

1 INCH WHEN PRINTED FULL SIZE

5/9/2011
P:\406182 (SR316 HWY\Phase II\Collins Hill\Final\dsc2.dgn