VOID

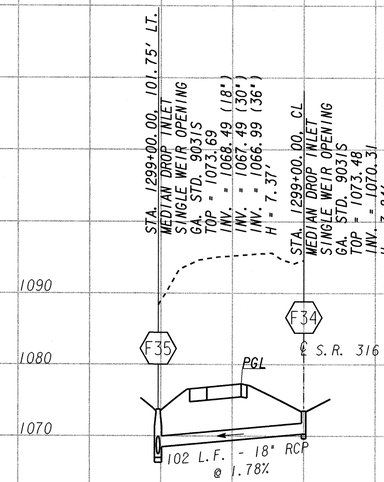

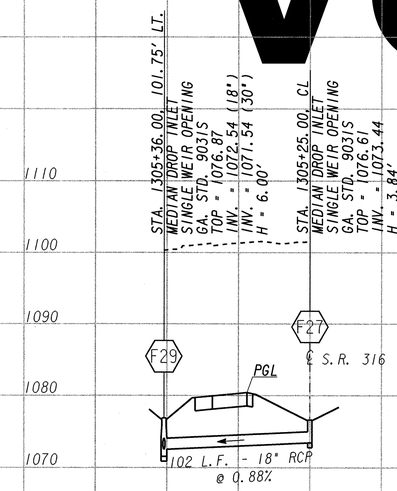

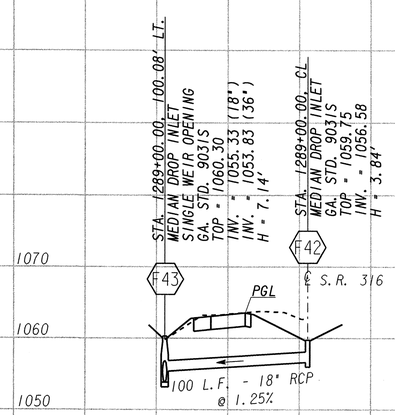

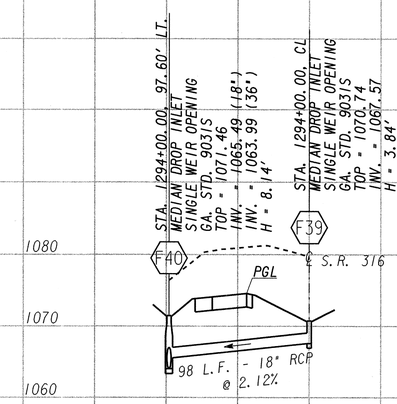

PBS&J

H. 0 50 100 150
V. 0 10 20 30
(SCALE IN FEET)

REVISION DATES		

STATE OF GEORGIA
DEPARTMENT OF TRANSPORTATION
OFFICE: PROGRAM DELIVERY

DRAINAGE CROSS SECTIONS

SR 316

DRAWING No. 22-05