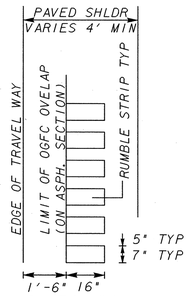

INSIDE & OUTSIDE SHOULDERS INDENTATION RUMBLE STRIP N.T.S.

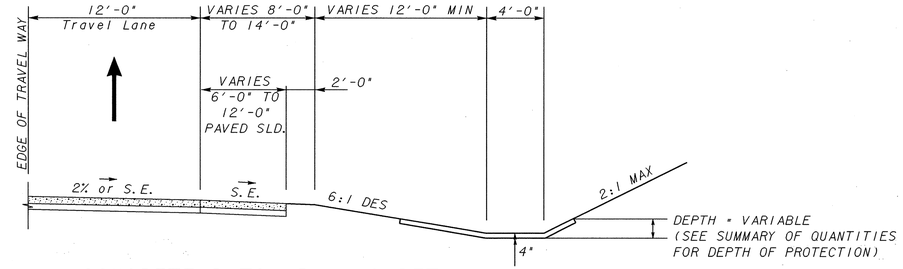

CONCRETE DITCH PAVING DETAIL

SEE GDOT STD. DRAWING D-10

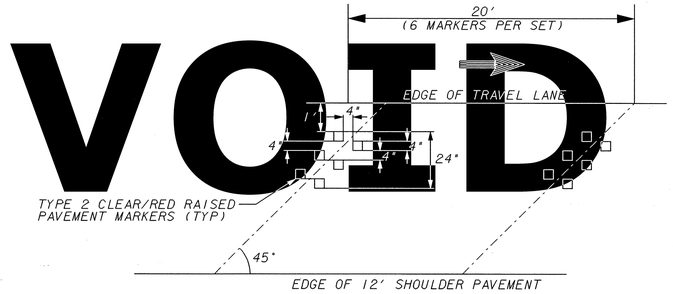

SR 316 OUTSIDE SHOULDER RAISED PAVEMENT MARKERS N.T.S.

WB: 1261+24.13 - 1313+97.60
EB: 1260+69.15 - 1313+82.31

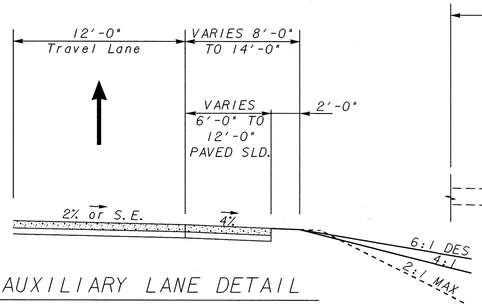

AUXILIARY LANE DETAIL

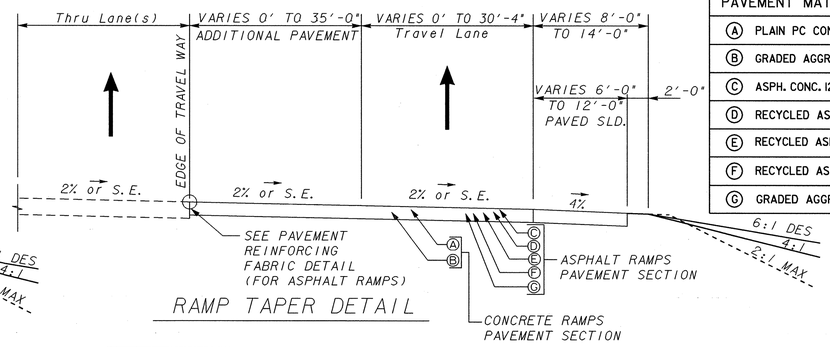

RAMP TAPER DETAIL

PAVEMENT MATERIAL SCHEDULE
(A) PLAIN PC CONCRETE PAVEMENT, CL I CONC, 12"
(B) GRADED AGGREGATE BASE COURSE, 10 INCH
(C) ASPH. CONC. 12.5 mm OGFC, 90 LBS./SY
(D) RECYCLED ASPH. CONC. 12.5 mm SMA, 165 LBS./SY
(E) RECYCLED ASPH. CONC. 19 mm SUPERPAVE, 220 LBS./SY
(F) RECYCLED ASPH. CONC. 25 mm SUPERPAVE, 880 LBS./SY
(G) GRADED AGGREGATE BASE COURSE, 12"

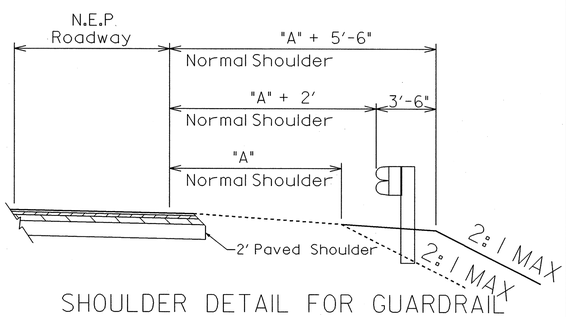

SHOULDER DETAIL FOR GUARDRAIL

SEE PLAN FOR LOCATION

SEE GA STD 4051 OR 4052 FOR DETAILS

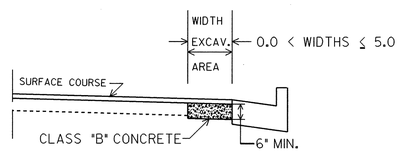

NO SCALE

CLASS "B" CONCRETE BASE OR PAVEMENT WIDENING

Item Code 500-9999 - Cu. Yds.

In excavated areas between the existing paving and new curb and gutter that are 5'-0" or less in width, Class "B" concrete shall be placed in lieu of the base and paving specified by the typical section. Payment will be made under "Class B Concrete Base and Pavement Widening".

In excavated areas greater than 5'-0" in width, the Contractor shall place base and paving as specified on the typical section.

See plans for details of curb and gutter construction.

CLASS "B" CONCRETE BASE OR WIDENING DETAIL

TYPICAL SECTION DETAIL TO BE USED WHEN EXISTING PAVEMENT IS TO BE RESURFACED WITH TWO INCHES OR MORE OF ASPHALTIC CONCRETE

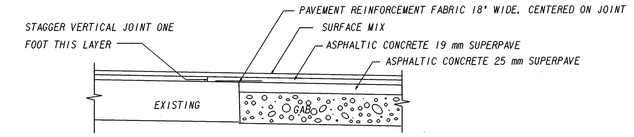

TYPICAL SECTION DETAIL TO BE USED WHEN EXISTING PAVEMENT IS TO BE RESURFACED WITH LESS THAN TWO INCHES OF ASPHALTIC CONCRETE

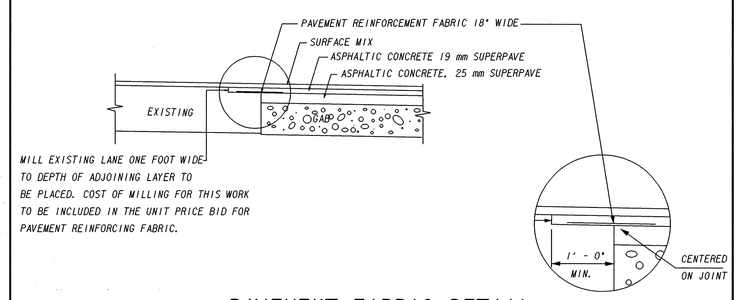

PAVEMENT FABRIC DETAIL

REVISION DATES		

PBS&J

STATE OF GEORGIA
DEPARTMENT OF TRANSPORTATION

OFFICE: PROGRAM DELIVERY

TYPICAL SECTIONS

DETAILS

DRAWING No. 5-020