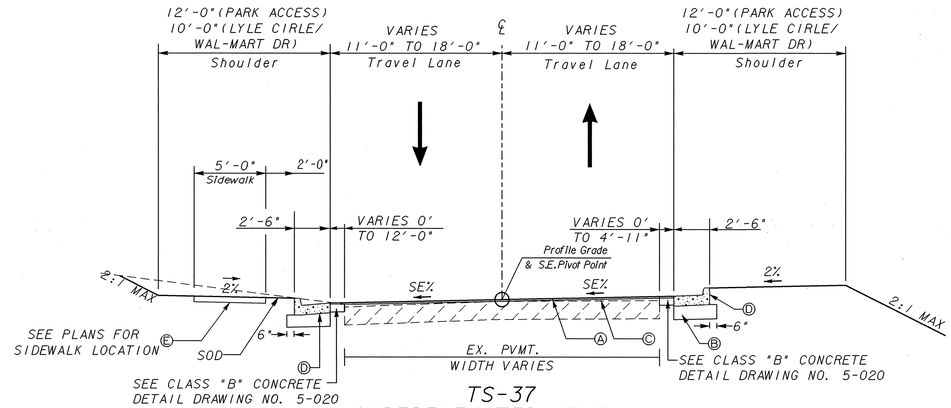

TS-37
SUPERELEVATED SECTION
OVERLAY AND WIDENING
PARK ACCESS DRIVE
WAL-MART DRIVE
LYLE CIRCLE

(WAL-MART DRIVE)
STA. 314+64.87 TO 315+27.66
(PARK ACCESS DRIVE)
STA. 329+22.00 TO 331+59.00
STA. 333+58.00 TO 336+54.62
(LYLE CIRCLE)
STA. 50+00.00 TO 50+68.00
STA. 54+07.67 TO 55+78.00

SLOPE CONTROLS		
SLOPE	CUT	FILL
4:1	0-6'	0-6'
3:1	--	--
*2:1	OVER 6'	OVER 6'

*GUARDRAIL REQUIRED ON FILL SLOPES

PAVEMENT MATERIAL SCHEDULE
(A) RECYCLED ASPH. CONC. 12.5 mm SUPERPAVE, 165 LBS./SY
(B) GRADED AGGREGATE BASE COURSE, 12"
(C) ASPHALTIC CONCRETE LEVELING, AS REQUIRED
(D) CONCRETE CURB & GUTTER, 8" X 30", TYPE 2, GA STD. 9032 B
(E) 5' CONCRETE SIDEWALK, 4 INCH THICK

24" GRASS PLOT AREA BETWEEN
CURB AND SIDEWALK SHALL USE SOD.

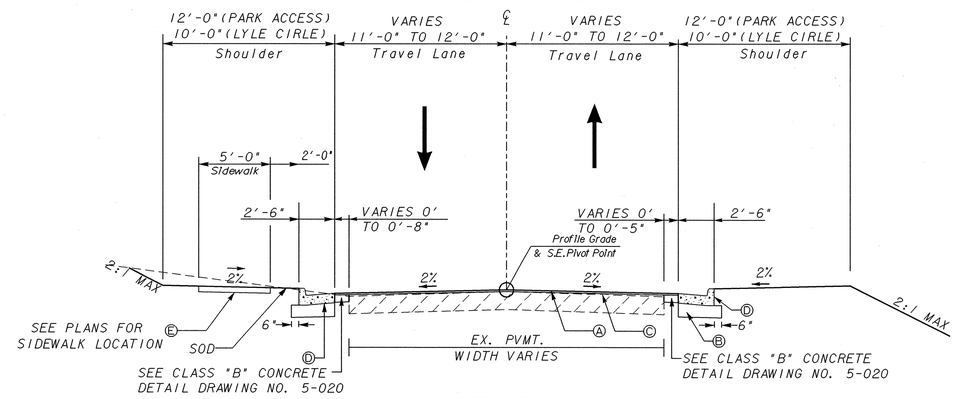

TS-38
TANGENT SECTION
OVERLAY AND WIDENING
PARK ACCESS DRIVE
LYLE CIRCLE

(PARK ACCESS DRIVE)
STA. 331+59.00 TO 333+58.00
(LYLE CIRCLE)
STA. 50+68.00 TO 51+88.38
STA. 55+78.00 TO 55+91.94

PBS&J

REVISION DATES		

STATE OF GEORGIA
DEPARTMENT OF TRANSPORTATION
OFFICE: PROGRAM DELIVERY

TYPICAL SECTIONS

PARK ACCESS DRIVE
LYLE CIRCLE/WAL-MART DRIVE

DRAWING No. 5-019

1/5/2009 GPLN