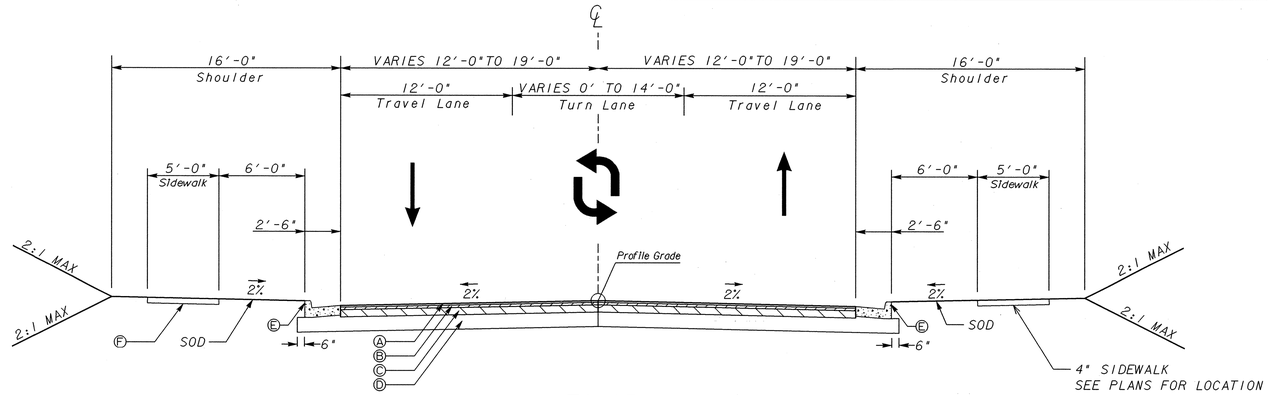

TS-25
TANGENT SECTION
FULL DEPTH
LENDON CONNECTOR

STA. 22+54.00 TO STA. 25+41.00

PAVEMENT MATERIAL SCHEDULE
Ⓐ RECYCLED ASPH. CONC. 12.5 mm SUPERPAVE, 165 LBS./SY
Ⓑ RECYCLED ASPH. CONC. 19 mm SUPERPAVE, 220 LBS./SY
Ⓒ RECYCLED ASPH. CONC. 25 mm SUPERPAVE, 660 LBS./SY
Ⓓ GRADED AGGREGATE BASE COURSE, 12"
Ⓔ CONCRETE CURB & GUTTER, 8" X 30", TYPE 2, GA STD. 9032 B
Ⓕ 5' CONCRETE SIDEWALK, 4 INCH THICK

72" GRASS PLOT AREA BETWEEN
CURB AND SIDEWALK SHALL USE SOD.

SLOPE CONTROLS		
SLOPE	CUT	FILL
4:1	0-6'	0-6'
3:1	--	--
*2:1	OVER 6'	OVER 6'

*GUARDRAIL REQUIRED ON FILL SLOPES

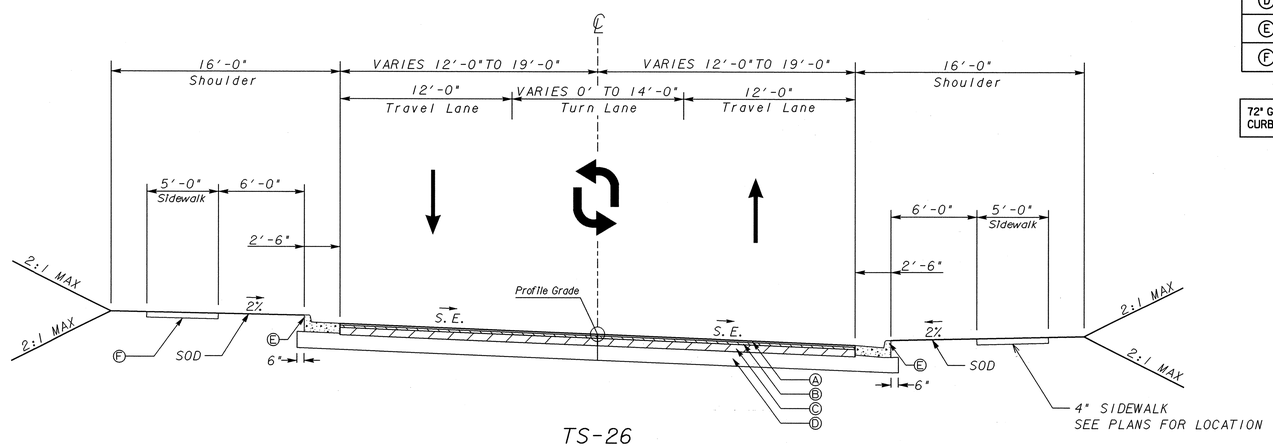

TS-26
SUPERELEVATED SECTION
FULL DEPTH
LENDON CONNECTOR

STA. 25+41.00 TO STA. 28+55.00

PBS&J

REVISION DATES		

STATE OF GEORGIA
DEPARTMENT OF TRANSPORTATION
OFFICE: PROGRAM DELIVERY

TYPICAL SECTIONS

LENDON CONNECTOR

DRAWING No. 5-013