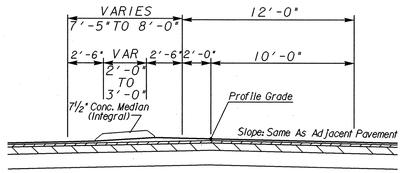

DETAIL FOR MEDIAN TURN LANE

SEE PLANS FOR LOCATION

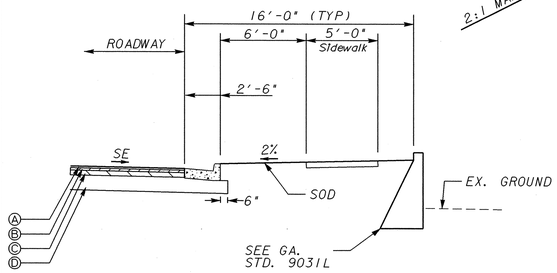

GRAVITY WALL DETAIL

COLLINS HILL ROAD
STA. 90+40.00 TO 91+50.00

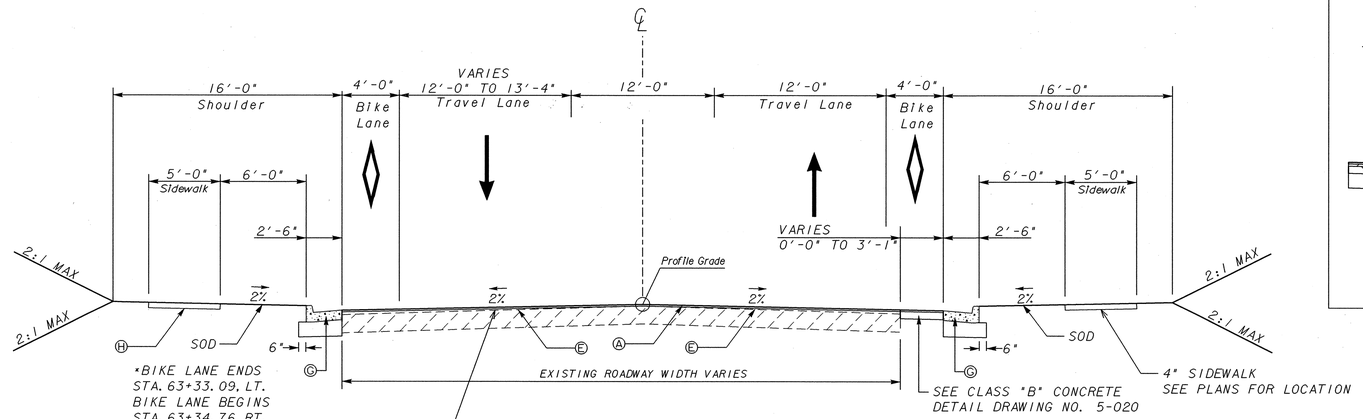

TS-15
TANGENT SECTION
OVERLAY AND WIDENING
COLLINS HILL ROAD

STA. 62+48.16 TO 63+47.67

GRASS PLOT AREA (35" TYP) BETWEEN PARAPET WALL AND 6"X24" CURB SHALL USE SOD.

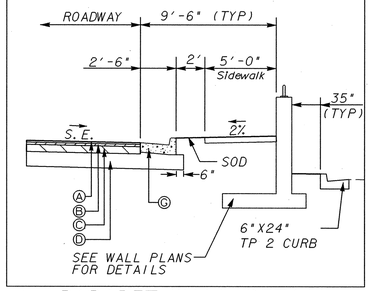

PARAPET WALL DETAIL

COLLINS HILL ROAD
STA. 67+93.52 TO 71+02.39

PAVEMENT MATERIAL SCHEDULE
(A) RECYCLED ASPH. CONC. 12.5 mm SUPERPAVE, 165 LBS./SY
(B) RECYCLED ASPH. CONC. 19 mm SUPERPAVE, 220 LBS./SY
(C) RECYCLED ASPH. CONC. 25 mm SUPERPAVE, 660 LBS./SY
(D) GRADED AGGREGATE BASE COURSE, 12"
(E) ASPHALTIC CONCRETE LEVELING, AS REQUIRED
(F) CONCRETE MEDIAN, INTEGRAL, 7½" THICK, TYPE 7, GA STD. 9032 B
(G) CONCRETE CURB & GUTTER, 8" X 30", TYPE 2, GA STD. 9032 B
(H) 5' CONCRETE SIDEWALK, 4 INCH THICK

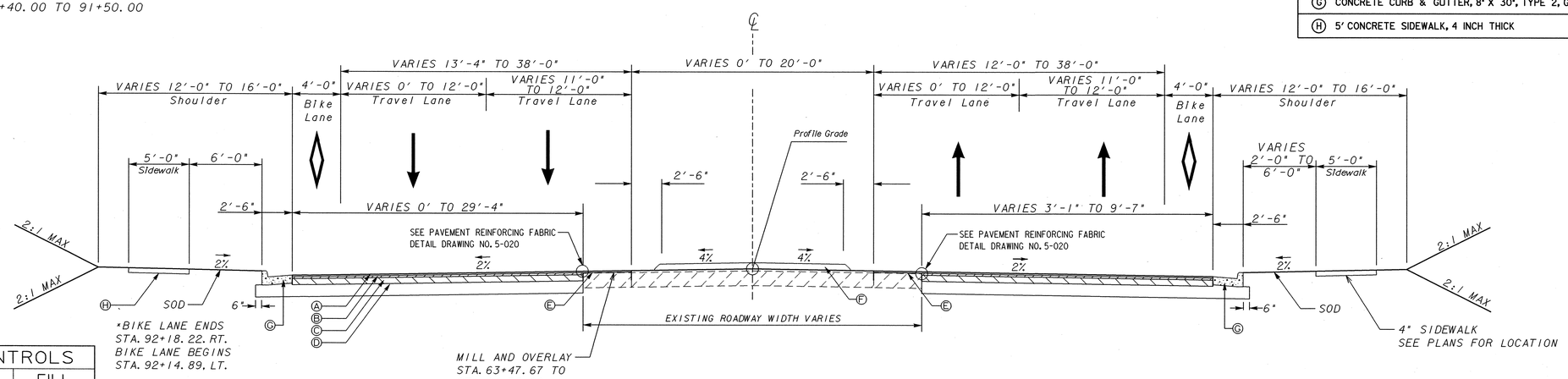

SLOPE CONTROLS		
SLOPE	CUT	FILL
4:1	0-6'	0-6'
3:1	--	--
*2:1	OVER 6'	OVER 6'

*GUARDRAIL REQUIRED ON FILL SLOPES

TS-16
TANGENT SECTION
OVERLAY AND WIDENING
COLLINS HILL ROAD

STA. 63+47.67 TO 68+02.45
STA. 88+00.00 TO 92+41.64

72" GRASS PLOT AREA BETWEEN CURB AND SIDEWALK SHALL USE SOD.

PBS&J

REVISION DATES		

STATE OF GEORGIA
DEPARTMENT OF TRANSPORTATION
OFFICE: PROGRAM DELIVERY

TYPICAL SECTIONS

COLLINS HILL ROAD

DRAWING No. 5-008