OGFC OVERLAP
@ INSIDE & OUTSIDE SHOULDERS
N.T.S.

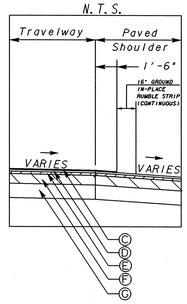

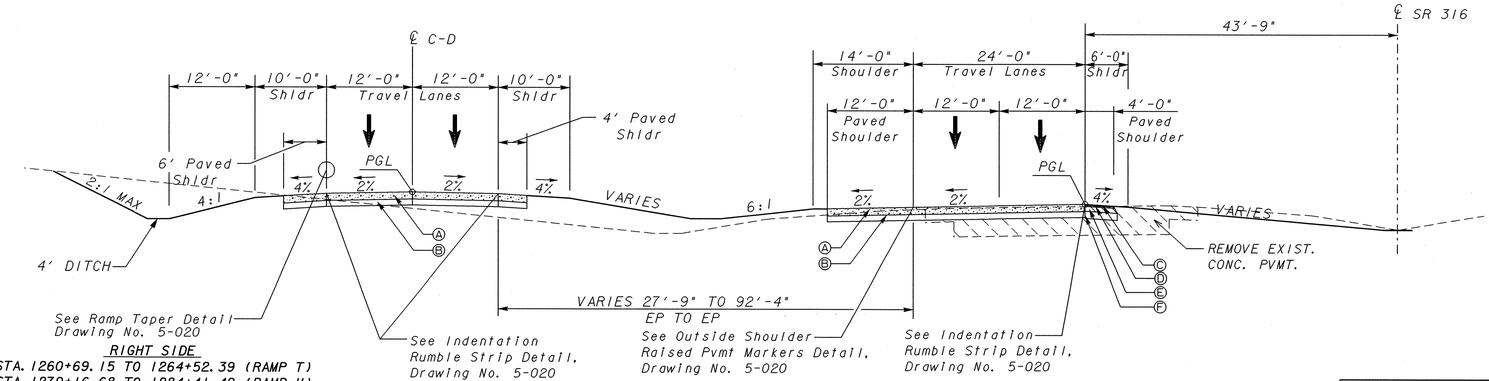

RIGHT SIDE
STA. 1260+69.15 TO 1264+52.39 (RAMP T)
STA. 1279+16.68 TO 1284+41.49 (RAMP U)

LEFT SIDE
STA. 1261+24.13 TO 1272+46.30 (RAMP W)
STA. 1279+85.83 TO 1282+61.21 (RAMP V)

TS-5
TANGENT SECTION
FULL DEPTH
SR 316 & CD LANES
(HALF-SECTION - RIGHT SIDE MIRROR IMAGE)

STA. 1260+69.15 TO 1261+24.13, RT
STA. 1261+24.13 TO 1294+30.90
STA. 1294+30.90 TO 1295+10.76, RT.

NOTE: ADDITIONAL 4" OF GAB SHOULD BE INSTALLED BY UNDERCUTTING SUBGRADE SOILS FROM STA. 1263+50.00 TO 1266+50.00.

PAVEMENT MATERIAL SCHEDULE
(A) PLAIN PC CONCRETE PAVEMENT, CL I CONC, 12"
(B) GRADED AGGREGATE BASE, 10 INCH
(C) RECYCLED ASPH. CONC. 12.5 mm SMA, 165 LBS./SY
(D) RECYCLED ASPH. CONC. 19 mm SUPERPAVE, 220 LBS./SY
(E) RECYCLED ASPH. CONC. 25 mm SUPERPAVE, 880 LBS./SY
(F) GRADED AGGREGATE BASE COURSE, 12"

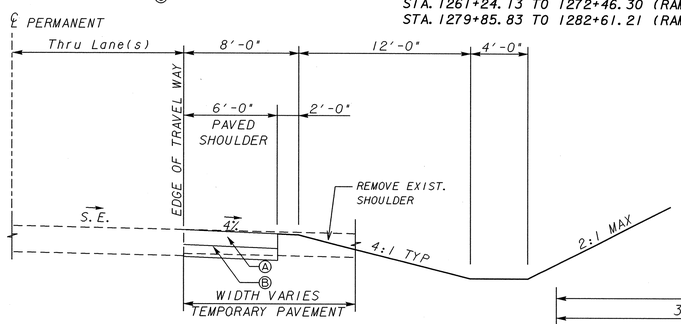

TEMPORARY PAVEMENT REMOVAL DETAIL

CONSTR. PERMANENT SHLDR. AFTER REMOVAL OF DETOUR PAVEMENT

EBCD- 2272+00.00 - 2273+00.00 ±50' EACH END
WBCD- 3271+90.00 - 3273+32.26 ±50' EACH END

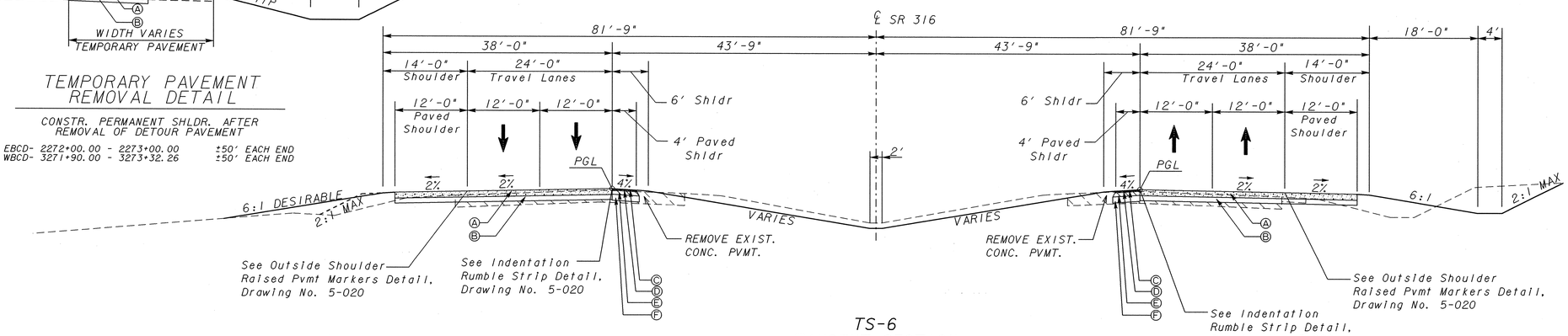

TS-6
TANGENT SECTION
FULL DEPTH
SR 316

STA. 1294+30.90 TO 1295+10.76, LT.
STA. 1295+10.76 TO 1313+82.31
STA. 1313+82.31 TO 1313+97.60, LT

SLOPE CONTROLS		
SLOPE	CUT	FILL
4:1	0-6'	0-6'
3:1	--	--
*2:1	OVER 6'	OVER 6'

*GUARDRAIL REQUIRED ON FILL SLOPES

CONCRETE SHOULDERS MUST BE PLACED TO MATCH RIDE QUALITY OF ADJACENT TRAVEL LANES.

PBSJ

REVISION DATES

STATE OF GEORGIA
DEPARTMENT OF TRANSPORTATION
OFFICE: PROGRAM DELIVERY

TYPICAL SECTIONS

SR 316

DRAWING No. 5-003