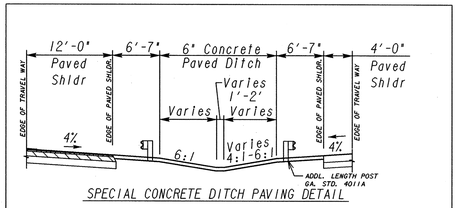

SPECIAL CONCRETE DITCH PAVING DETAIL

STA. 1254+91.23 TO 1259+82.83 (SR 316)
STA. 2253+00.00 TO 2259+39.87 (EASTBOUND CD RD.)

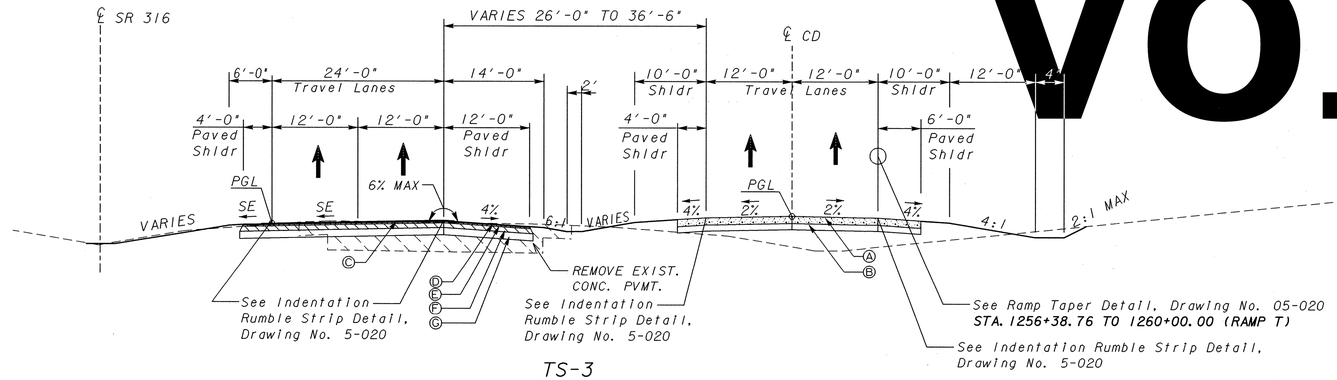

VOID

TS-3
SUPERELEVATED SECTION
FULL DEPTH REPLACEMENT AND WIDENING
SR 316 & CD LANES

STA. 1253+91.57 TO 1260+00.00, RT.

PAVEMENT MATERIAL SCHEDULE
(A) PLAIN PC CONCRETE PAVEMENT, CL 1 CONC, 12"
(B) GRADED AGGREGATE BASE, 10 INCH
(C) ASPH. CONC. 12.5 mm OGFC, 90 LBS./SY
(D) RECYCLED ASPH. CONC. 12.5 mm SMA, 165 LBS./SY
(E) RECYCLED ASPH. CONC. 19 mm SUPERPAVE, 220 LBS./SY
(F) RECYCLED ASPH. CONC. 25 mm SUPERPAVE, 880 LBS./SY
(G) GRADED AGGREGATE BASE COURSE, 12"

SLOPE CONTROLS		
SLOPE	CUT	FILL
4:1	0-6'	0-6'
3:1	--	--
*2:1	OVER 6'	OVER 6'

*GUARDRAIL REQUIRED ON FILL SLOPES

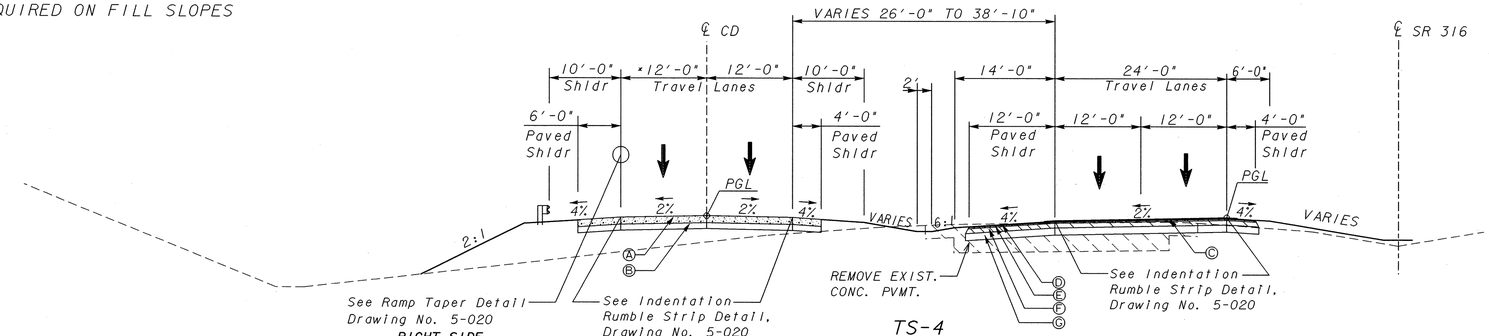

RIGHT SIDE
STA. 1260+00.00 TO 1260+69.15 (RAMP T)

*VARIES FROM 14'-6" TO 16'-9"
STA. 1260+25.28 TO STA. 1261+24.13, LT.

TS-4
TANGENT SECTION
FULL DEPTH REPLACEMENT AND WIDENING
SR 316 & CD LANES

STA. 1260+00.00 TO 1260+69.15, RT.
STA. 1260+25.28 TO 1261+24.13, LT.

(HALF SECTION - RIGHT SIDE MIRROR IMAGE)

OGFC OVERLAP
@ INSIDE & OUTSIDE SHOULDERS
N.T.S.

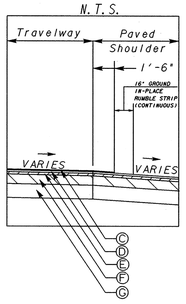

PBSJ

REVISION DATES		

STATE OF GEORGIA
DEPARTMENT OF TRANSPORTATION
OFFICE: PROGRAM DELIVERY
TYPICAL SECTIONS
SR 316
DRAWING No. 5-002

1/5/2009 GPLN