STATE	PROJECT NUMBER	SHEET NO.	TOTAL SHEETS
GA.		407	584

OUTLET HEADWALL

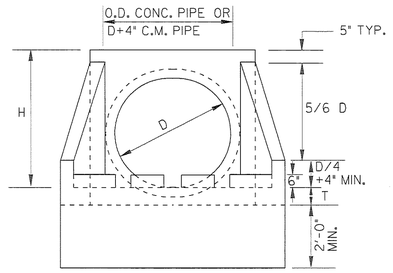

FRONT ELEVATION

INLET HEADWALL

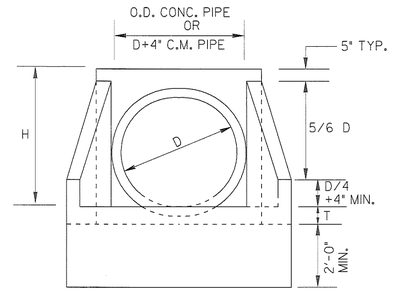

FRONT ELEVATION

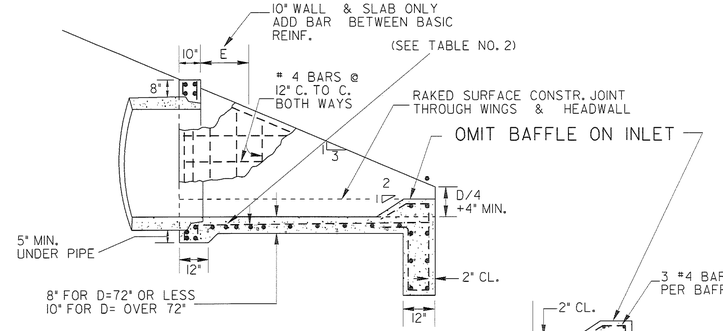

SECTION A-A

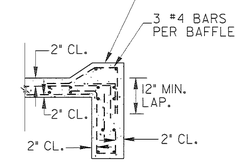

10" SLAB

D = INSIDE DIAMETER OF PIPE

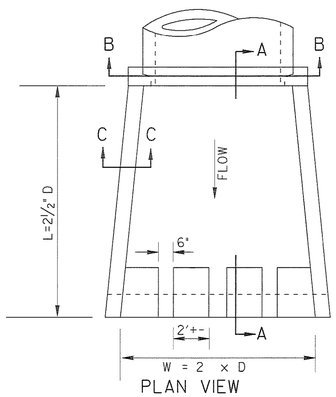

PLAN VIEW

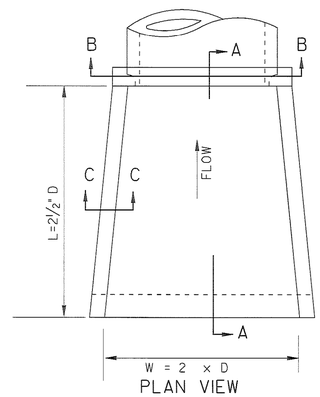

PLAN VIEW

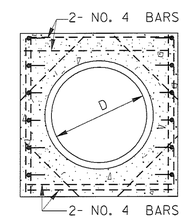

SECTION B-B
(SINGLE PIPE LINE)

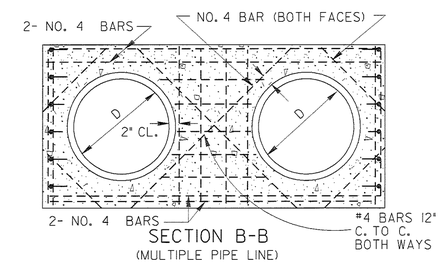

SECTION B-B
(MULTIPLE PIPE LINE)

TABLE NO. 1 - QUANTITIES FOR HEADWALLS												
CU. YDS. CONCRETE (PAY QUANTITIES) ✳						LBS. STEEL (GIVEN FOR INFORMATION ONLY)						
	FOR SINGLE LINE			ADD FOR ADD'L LINE			FOR SINGLE LINE			ADD FOR EACH ADD'L LINE		
D	INLET	OUTLET		INLET	OUTLET		INLET	OUTLET		INLET	OUTLET	
15"	0.87	0.93		0.60	0.66		102	113		73	83	
18"	1.10	1.16		0.85	0.93		106	117		93	104	
24"	1.61	1.69		1.29	1.37		127	138		124	134	
30"	2.21	2.32		1.83	1.96		170	180		154	164	
36"	2.92	3.05		2.49	2.63		238	254		196	212	
42"	3.73	3.87		3.00	3.17		290	306		231	247	
48"	4.62	4.80		3.58	3.74		335	351		265	281	
54"	5.63	5.83		4.17	4.38		407	428		319	340	
60"	6.72	6.95		4.82	5.01		456	477		360	391	
72"	9.22	9.48		6.24	6.46		623	649		475	494	
84"	14.84	15.19		9.05	9.29		1517	1539		1017	1044	
96"	18.88	19.27		11.13	11.41		2118	2150		1323	1350	

✳NOTE:
QUANTITIES SHOWN WILL BE ACTUAL PAY QUANTITIES FOR CLASS "A" CONCRETE, INCLUDING REINFORCED STEEL. NO ADJUSTMENT WILL BE MADE FOR AS BUILT QUANTITIES.

D - INSIDE DIAMETER OF PIPE CULVERT

H = D + 10" MIN. FOR C.M. PIPE

H = D + PIPE WALL THICKNESS + 8" FOR CONC. PIPE
(13/12 D + 9" TYP.)

T = 8" FOR D = 72" OR LESS
T = 10" FOR D = OVER 72"

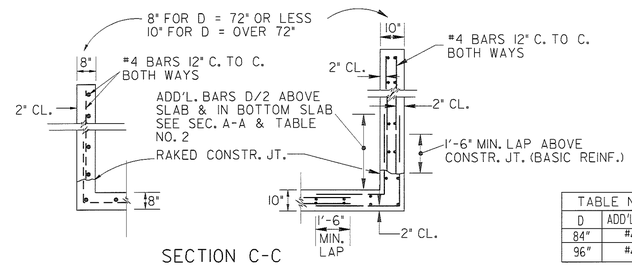

SECTION C-C

TABLE NO. 2		
D	ADD'L.BAR	E
84"	#4	5'
96"	#4	8'

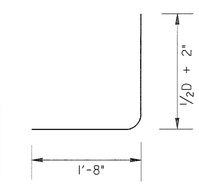

ADDITIONAL BAR DETAIL

DATE	REVISION	BY

DEPARTMENT OF TRANSPORTATION
STATE OF GEORGIA

STANDARD
TAPERED
INLET HEADWALL - OUTLET HEADWALL
(BUILT-IN-PLACE)

NO SCALE

REV. & REDR. OCT., 1999

DES. ____ DRW. ____ TRA. ____ CHK. ____

(SUBMITTED) James A. Lemons
STATE ROAD & AIRPORT DESIGN ENGR.

(APPROVED) Frank L. Daddato
CHIEF ENGINEER

NUMBER
1125