STATE	COUNTY	PROJECT NUMBER	SHEET NO.	TOTAL SHEETS
GA.			381	384

INDUCTIVE LOOP VEHICLE DETECTOR DETAILS

USING STRANDED COPPER WIRE

PLAN VIEW OF STANDARD LOOP SAW CUTS

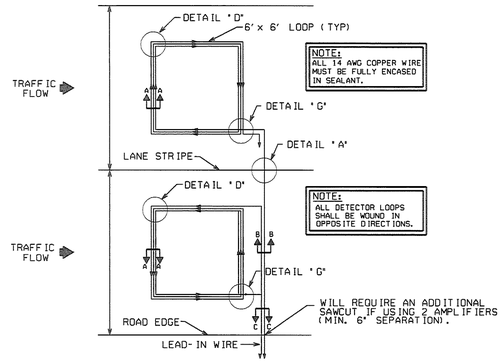

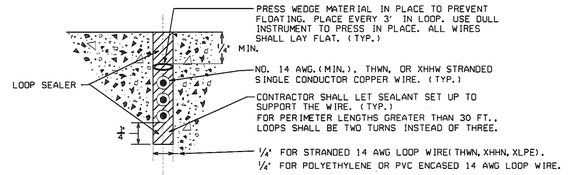

SECTION AA

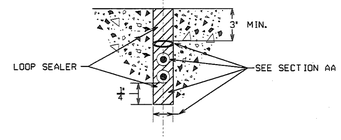

SECTION BB

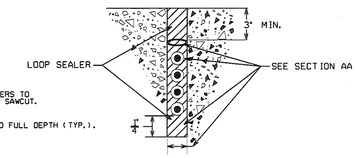

SECTION CC

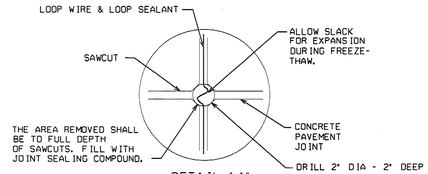

DETAIL "A"

NOTE: USE FOR CONCRETE PAVEMENT ONLY.

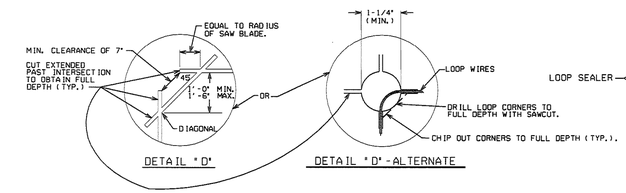

DETAIL "D"

DETAIL "D"-ALTERNATE

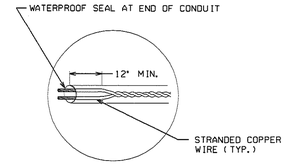

DETAIL "E"

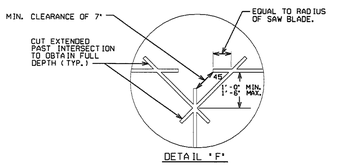

DETAIL "F"

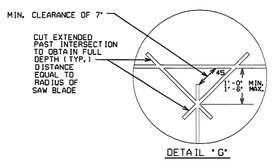

DETAIL "G"

PLAN VIEW OF QUADRUPOLE

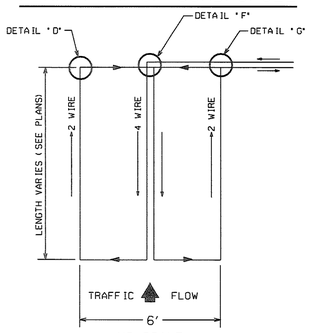

NO SCALE

LOOP WIRE CONFIGURATION

THE DOUBLE LAYER CONFIGURATION (2-4-2) SHOWN IS A MINIMUM DESIGN FOR NORMAL INSTALLATIONS WHEN REQUIRED BY THE PLANS.

PLAN VIEW OF STANDARD LOOP

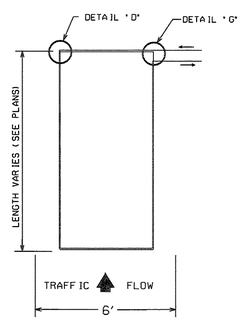

NO SCALE

LOOP WIRE CONFIGURATION

THE DOUBLE LAYER CONFIGURATION (2-2) SHOWN IS A MINIMUM DESIGN FOR NORMAL INSTALLATIONS WHEN REQUIRED BY THE PLANS.

TYPICAL CURB DETAIL

(WITH SIDEWALK)

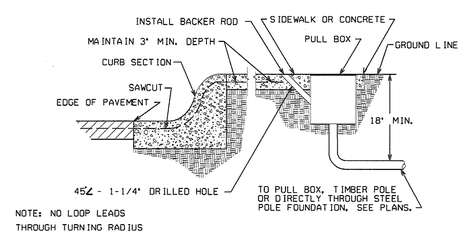

NOTE: NO LOOP LEADS THROUGH TURNING RADIUS

TYPICAL CURB DETAIL

(WITHOUT SIDEWALK)

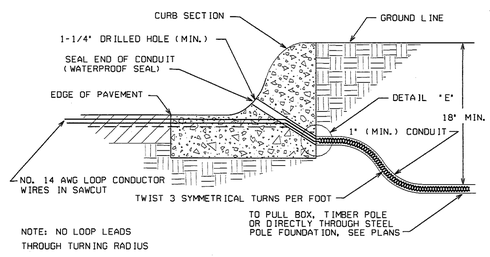

NOTE: NO LOOP LEADS THROUGH TURNING RADIUS

DETAIL WHERE NO CURB EXISTS

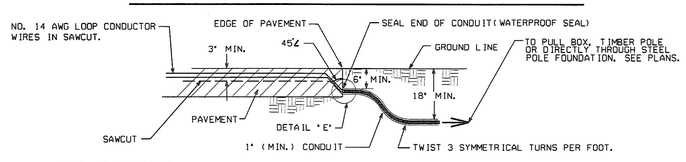

NOTE: NO LOOP LEADS THROUGH TURNING RADIUS

Guidelines For Usage On Metric Projects

When these details are incorporated into plans and or projects that are being prepared or constructed in metric units, exact or precise conversion to metric units is not required. The dimensions shown that are in feet and inches may be converted to corresponding metric units using the following "Rounded-Off" conversion factors: 1" =25mm, 4"=100mm, and 12" or 1'=300mm. All measurement notes that refer to linear feet and square yards shall be interpreted to mean linear meters and square meters.

PULL BOX-SPLICE DETAILS

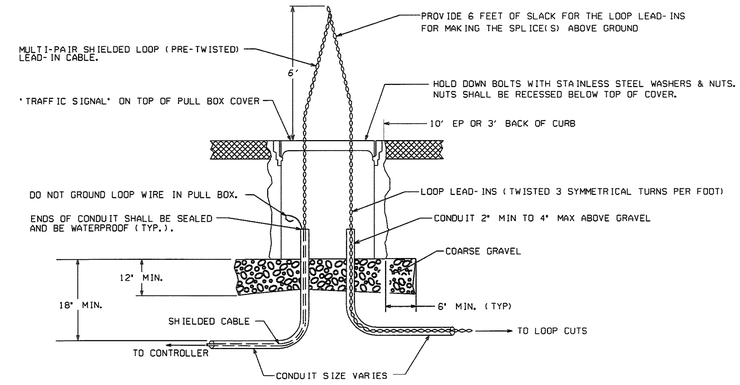

SPLICE DETAILS

ALTERNATE #1

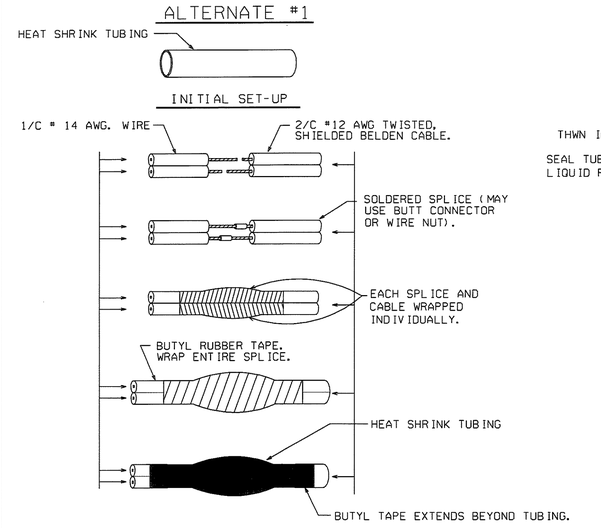

ALTERNATE #2

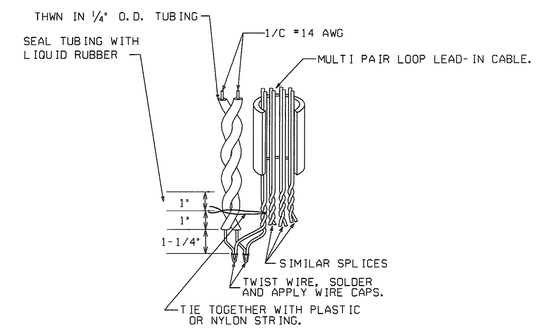

NOTE:

FINISHED SPLICE MUST BE WATERPROOF.

FINISHED SPLICE

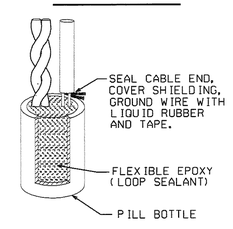

REV. BY:	REVISION DESCRIPTION	DATE

DEPARTMENT OF TRANSPORTATION
STATE OF GEORGIA

TRAFFIC SIGNAL DETAIL

INDUCTIVE-LOOP

DETECTOR INSTALLATION

APRIL 2010

NOT TO SCALE - REPORT ERRORS

DETAIL NUMBER

TS-01