STATE	PROJECT NUMBER	SHEET NUMBER	TOTAL SHEETS
GEORGIA	NH500-0003-00(621)	10	297

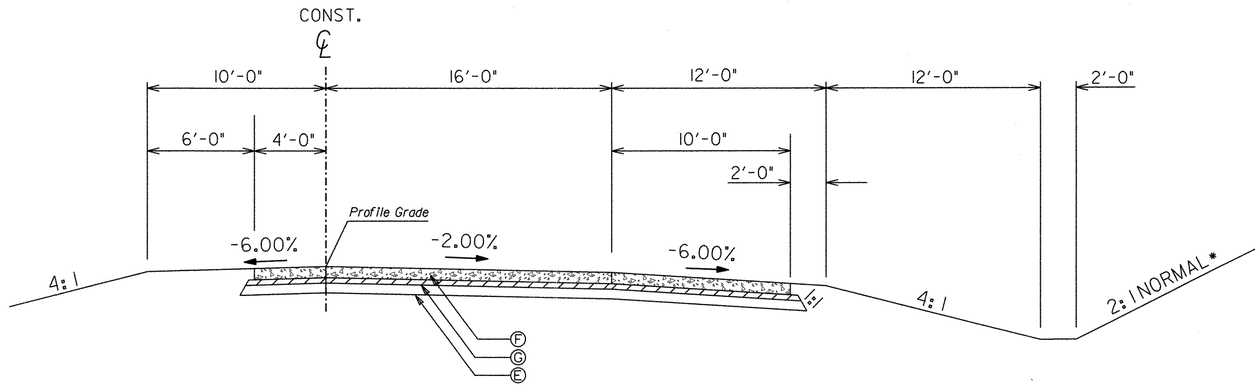

TS–07

TANGENT SECTION FOR RAMPS A & C
APPLIES TO RAMP A STA. 110+00.00 STA. 125+47.00
APPLIES TO RAMP C STA. 310+22.00 STA. 325+30.00

△ SLOPE 6.25% OR RATE OF S.E. WHICHEVER IS GREATER

□ ALGEBRAIC DIFFERENCE IN PAVING AND SHOULDER SLOPE NOT TO EXCEED 8.0%

SLOPE CONTROLS		
SLOPE	CUT	FILL
4:1	0-6'	0-10'
3:1	6'-10'	--
2:1•	OVER 6'	OVER 6'

•GUARDRAIL REQUIRED

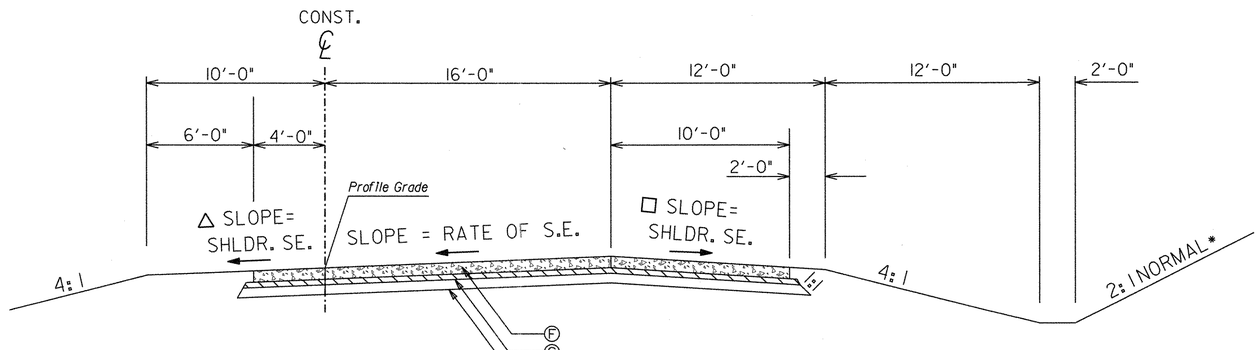

TS–08

SUPERELEVATED SECTION FOR RAMPS A & C
SEE ROADWAY PLANS FOR SUPERELEVATED STATION RANGES

* SEE EARTHWORK CROSS SECTIONS FOR ANY VARIANCE IN THIS BACKSLOPE

REQUIRED PAVEMENT

Ⓖ ASPHALTIC CONCRETE, 25 mm SUPERPAVE, 330 lbs/sq. yd.

Ⓔ GRADED AGGREGATE BASE, 12"

Ⓕ PLAIN PORTLAND CEMENT PAVEMENT, CLASS 3 CONCRETE , 12"

NOT TO SCALE

REVISIONS							
△	DATE	BY	DESCRIPTION	△	DATE	BY	DESCRIPTION

Moreland Altobelli Associates, Inc.
2211 Beaver Ruin Road
Suite 190
Norcross, Georgia 30071
Telephone (770) 263-5945

	NAME	DATE		NAME	DATE		NAME	DATE
DESIGNED BY			DRAWN BY			QUANTITIES BY		
CHECKED BY			CHECKED BY			CHECKED BY		
SUPERVISED BY								

Department of Transportation
State of Georgia

TYPICAL SECTION
I-20 RAMPS

DRAWING NUMBER
5-04

g:\hwy\985181A\03621TYP.dgn 11/11/2010 2:50:10 PM