STATE	PROJECT NUMBER	SHEET NO.	TOTAL SHEETS
GA.	NHS00-0002-00(923)	460	690

NOTE:

SEE STANDARD 1019-A- BRICK DROP INLETS- FOR DETAIL OF GRATING FRAME,HOOD,ETC., WHERE NEEDED.

NOTE: OPENING FOR PIPE SHALL BE THE OUTSIDE DIAMETER OF THE REQ'D PIPE PLUS 1" MIN..OPENING SHALL HAVE CORRUGATIONS

TYPE "A"

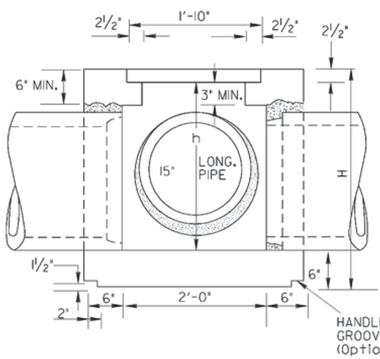

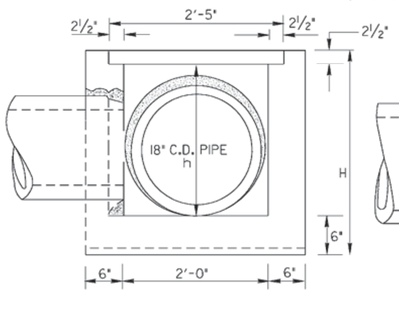

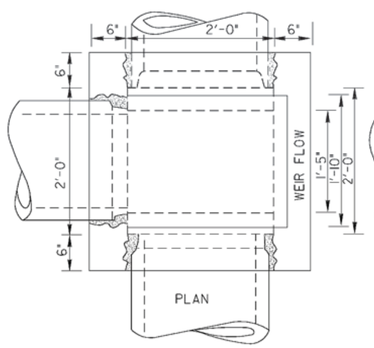

SCALE: 1" =1'

TYPE"B" WITH WEIR

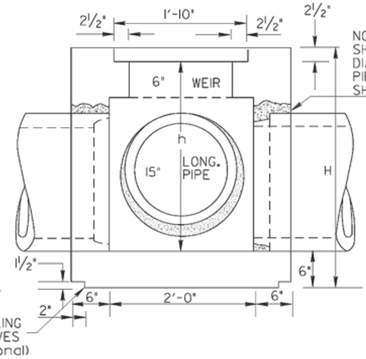

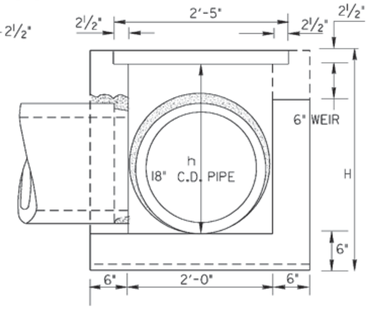

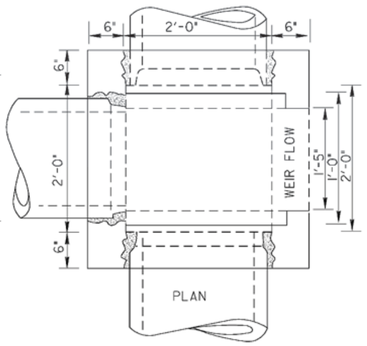

SCALE: 1" =1'

TYPE "C" (WITH OR WITHOUT WEIR)

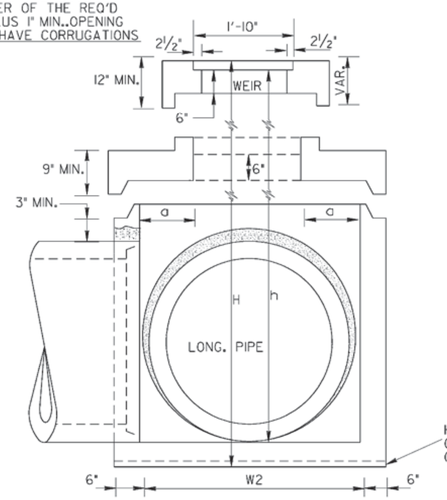

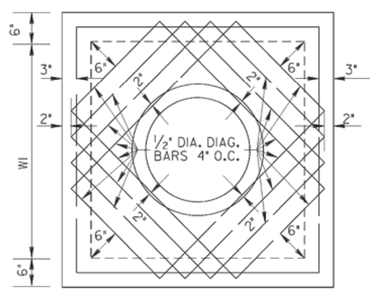

SCALE: ¾" =1

FOR OTHER DETAILS, SEE TYPE "B"

TYPE "E"

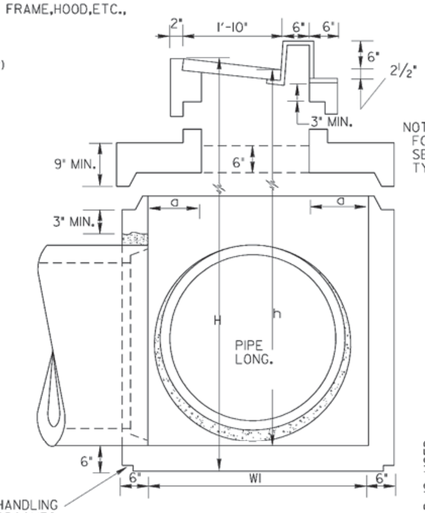

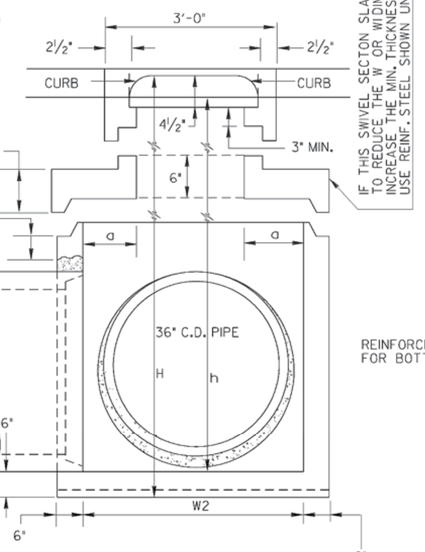

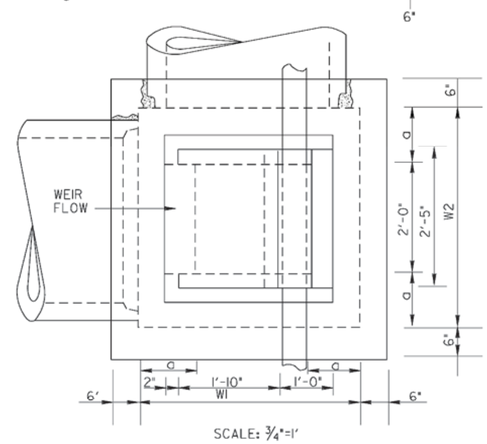

SCALE: ¾"=1'

NOTE:
FOR REINF. STEEL, SEE DETAIL UNDER TYPE "C"

IF THIS SWIVEL SECTON SLAB IS USED TO REDUCE THE W OR W1 DIMENSIONS, INCREASE THE MIN. THICKNESS TO 9" AND USE REINF. STEEL SHOWN UNDER TYPE "C"

ISOMETRIC VIEW OF DROP INLET TYPE "C" OR "E" FOR PIPES LARGER THAN 18"(WITH OR WITHOUT WEIR)

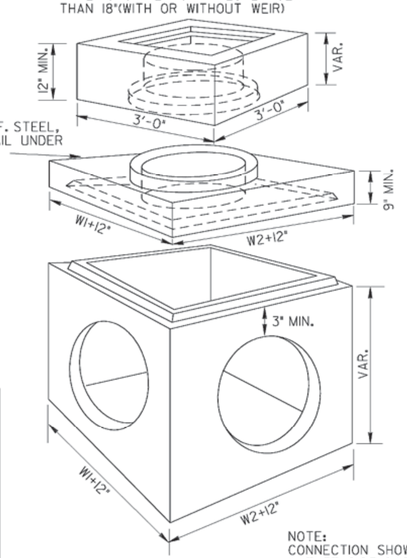

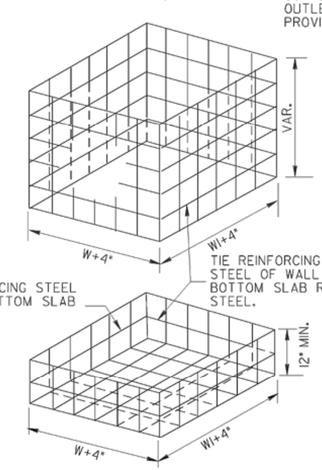

TIE REINFORCING STEEL OF WALL TO BOTTOM SLAB REINF. STEEL.

REINFORCING STEEL FOR BOTTOM SLAB

NOTE:
CONNECTION SHOWN ABOVE FOR USE WHERE CONCRETE OUTLET PIPE DOES NOT HAVE BELL OR HUB END PROVIDED AT STRUCTURE OUTLET.

METHOD OF CONNECTING PIPE

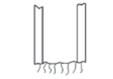

STEP 1

CUT CONCRETE PIPE LEAVING APPROXIMATELY 3" OF REINFORCING MESH EXPOSED.

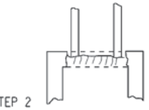

STEP 2

POSITION PIPE APPROXIMATELY 3" INTO OPENING OF WALL.

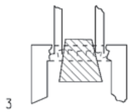

STEP 3

POSITION CONICAL CORE INSIDE OF PIPE AND SEAL WITH GROUT (1/2" MIN. THICKNESS OF GROUT). REMOVE CORE WHEN SET AND RUB GROUT TO SEAL JOINTS.

ALTERNATE METHOD OF CONNECTION SKEWED PIPE

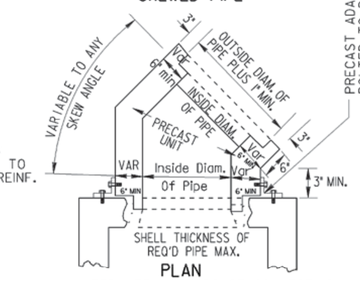

PLAN

ALTERNATE METHODS OF CONNECTING SKEWED PIPES MAY INCLUDE PIPE ELBOWS OR CIRCULAR PRECAST BASE UNITS. SEE SEPARATE STANDARDS.

NOTE: REINFORCING STEEL SHALL BE No. 4 STEEL BARS AT 12" O.C. BOTH WAYS OR EQUIVALENT WIRE FABRIC REINFORCING.

SPECIAL NOTE:
STANDARD 1019A INLETS ARE FOR USE AT LOW POINTS AND WHERE HYDRAULIC LOW CAPACITY GRATES ARE SUFFICIENT. WHERE HIGHER CAPACITY GRATES ARE NEEDED ON A CONTINUOUS GRADE, STANDARD 1019B IS RECOMMENDED.

41-004

DIMENTIONS FOR DROP INLETS

PIPE SIZE	TYPE "A"		TYPE "B"		TYPE "C"				TYPE "E"			
	MIN. h	MIN. H	MIN. h	MIN. H	W1orW2	a	MIN. h	MIN. H	W1orW2	a	MIN. h	MIN. H
15"	2'- 0"	2'-8½"	2'- 7"	3'-3½"	2'- 0"		2'-7"	3'-3½"	2'- 0"		2'-7"	3 - 3½"
18"	2'-3½"	3'- 0"	2'-10"	3'-6½"	2' - 0"		2'-10"	3'-6½"	2'- 0"		2'-10"	3 - 6½"
24"					3' - 0"	0'- 6"	4'- 3½"	5'- 0"	3'- 0"	0'- 6"	4'- 7"	5 - 3 "
30"					3' - 6"	0'- 9"	4'-10½"	5'- 7"	3'- 6"	0'- 9"	5'- 2"	5 - 10"
36"					4' - 0"	1'- 0"	5'- 5½"	6'- 2"	4'- 0"	1'- 0"	5'- 9"	6 - 3 "
42"					4' - 6"	1'- 3"	6'-1/2	6'- 8"	4'- 6"	1'- 3"	6'- 4"	7 - 0 "
48"					5' - 0"	1'- 6"	6'- 7½"	7'- 3"	5'- 0"	1'- 6"	6'- 11"	7 - 7 "
54"					5' - 6"	1'- 9"	7'- 2½"	7'-10"	5'- 6"	1'- 9"	7'- 6"	8 - 2 "
60"					6' - 0"	2'- 0"	7'- 9½"	8'- 5"	6'- 0"	2'- 0"	8'- 1"	8 - 9 "

NOTE:
SEE STANDARD 1019A (BRICK) AND STANDARD 1040 FOR CONSTRUCTION ALTERNATES BRICK MASONRY AND CIRCULAR PRECAST SECTIONS RESPECTIVELY.

DEPARTMENT OF TRANSPORTATION
STATE OF GEORGIA

STANDARD PRECAST DROP INLETS

SCALE AS SHOWN — AUG. 1999

DATE | REVISION | BY

DESIGNED ____ (SUBMITTED) James A. Kraus
DRAWN ____ STATE ROAD & AIRPORT DESIGN ENGINEER
TRACED ____ (APPROVED) Paul L. Ostby
CHECKED ____ CHIEF ENGINEER

NUMBER 1019A PRECAST