F:\FOLDER\DATA\BRI28667\16B0CC0.TIF

STATE	PROJECT NUMBER	SHEET NO.	TOTAL SHEETS
GA.	NHS-0002-00(754)	131	146

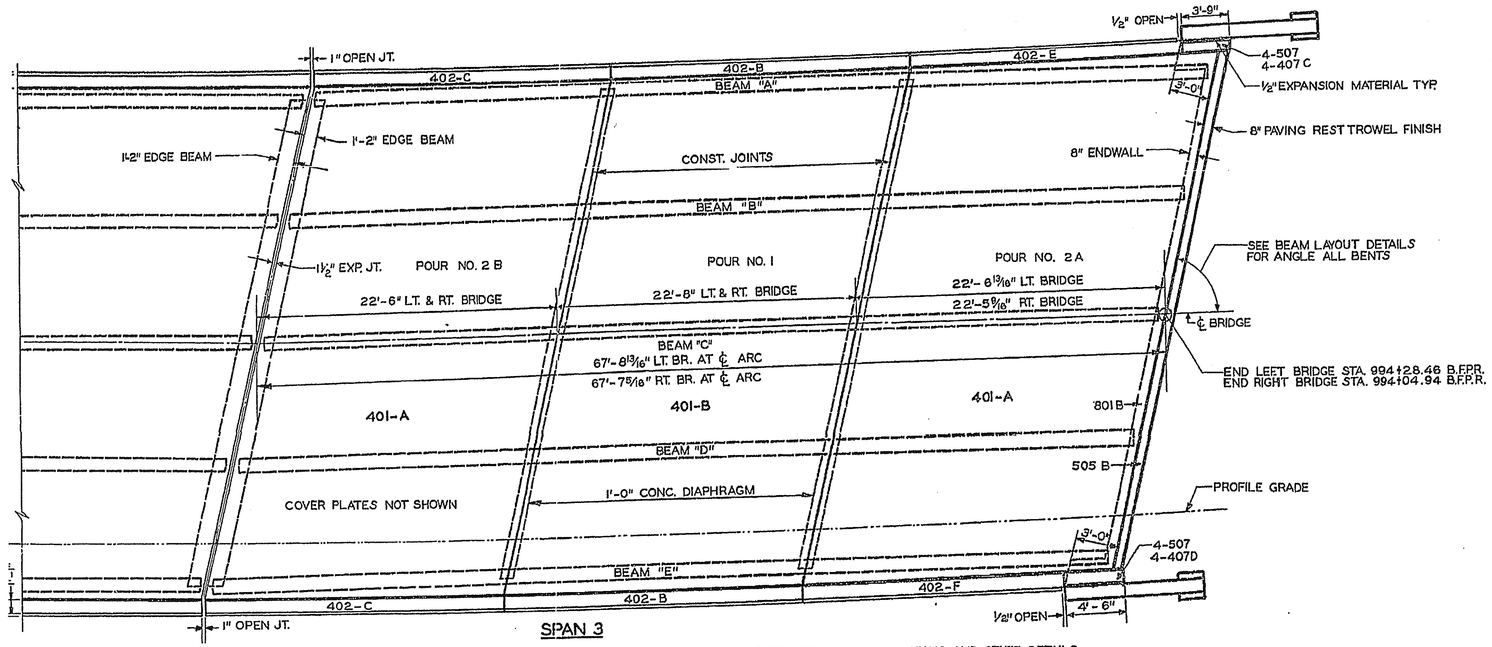

NOTE: FOR TYPICAL SECTIONS AND OTHER DETAILS SEE SUPERSTRUCTURE DETAILS SHEET NO. 1

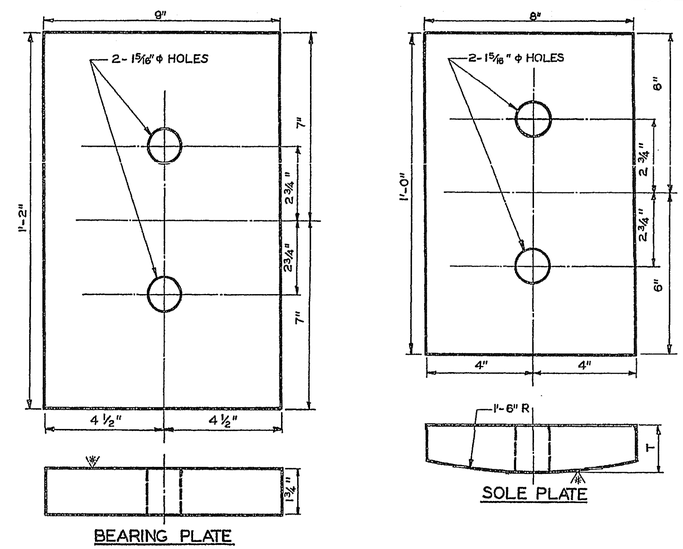

BEARING DETAILS-FIXED END
NO SCALE

DIMENSION "T"		
BENT	LT. BR.	RT. BR.
1	1 3/4"	1 3/4"
2-BACK	1 1/2"	1 1/2"
2-AHEAD	2 1/2"	2 1/2"
3-BACK	1 1/2"	1 1/2"
3-AHEAD	1 3/4"	1 3/4"
4	1 3/4"	1 3/4"

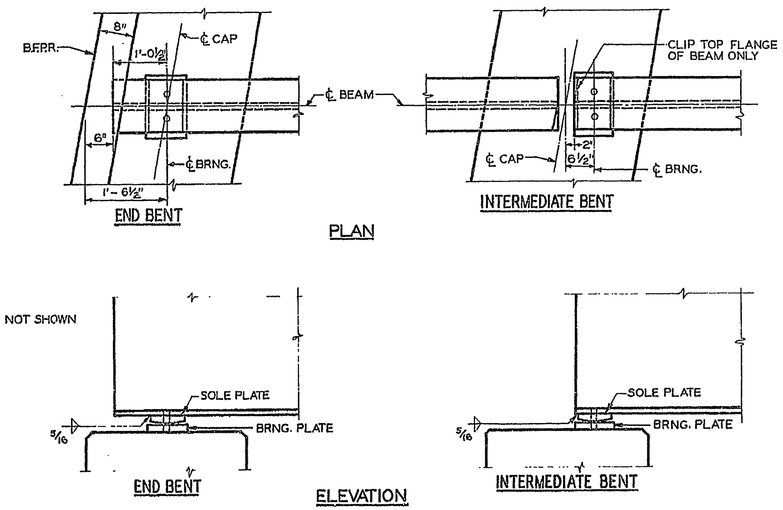

BEARING ASSEMBLY-FIXED END
NO SCALE

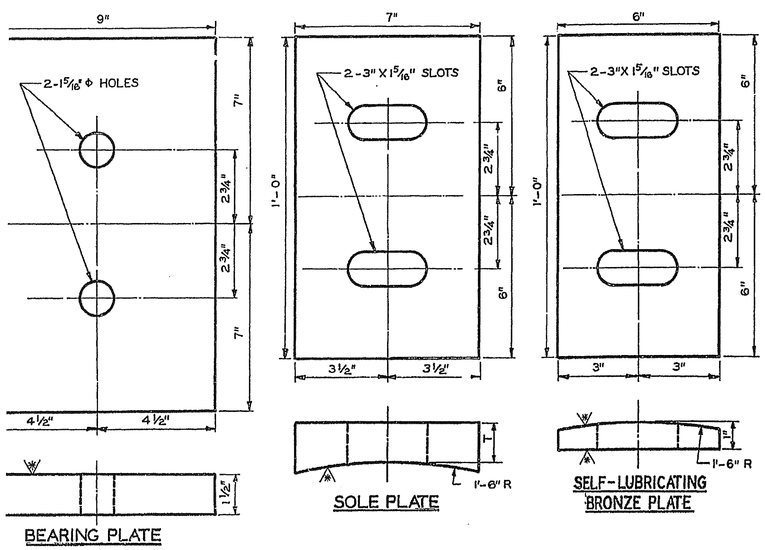

BEARING DETAILS-EXPANSION END
NO SCALE

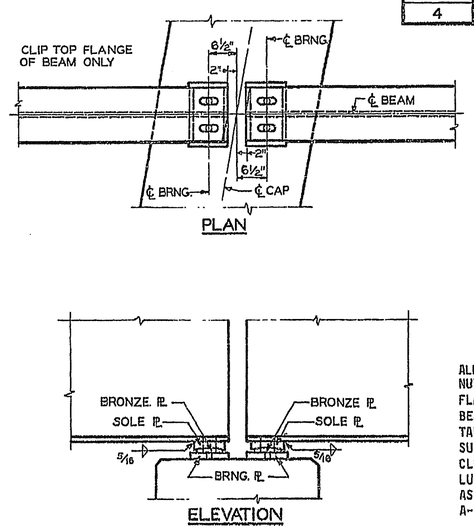

BEARING ASSEMBLY-EXPANSION END
NO SCALE

ALL ANCHOR BOLTS ARE 1"ø x 1'-6" LONG, SWEDGED, WITH A.S.R. HEX NUT AND 3" x 3" x 1/11" CUT WASHERS. PROVIDE HOLES OR SLOTS IN BEAM FLANGE TO MATCH THOSE IN SOLE PLATE. ALL PLANED OR MACHINED BEARING SURFACES SHALL BE SHOP COATED WITH WHITE LEAD AND TALLOW ACCORDING TO GEORGIA STANDARD SPECS., ART. 501.40. SURFACES IN CONTACT WITH SELF-LUBRICATING BRONZE PLATE SHALL BE CLEANED BEFORE ERECTION AND COATED WITH LIQUID OR STICK LUBRICANT FURNISHED BY MANUFACTURER. ALL COMPONENTS OF BEARING ASSEMBLIES, EXCEPT BRONZE PLATE, SHALL BE A.S.T.M. DESIGNATION A-36 OR A-7.

* A.S.A. 125 ALL SLIDING SURFACES.
A.S.A. 250 ALL ROLLING SURFACES.

BRIDGE NO. 10 LEFT AND RIGHT

STATE HIGHWAY DEPARTMENT OF GEORGIA
BRIDGE DEPARTMENT

SUPERSTRUCTURE DETAILS NO. 2
BRIDGES OVER SHOAL CREEK
STA. 992 + 14.50 TO STA. 994 + 16.50
DEKALB COUNTY I. 285-1(42)117

SCALE AS SHOWN SEPTEMBER 1965

REVISIONS: DATE | BY

BRIDGE SHEET 52 OF 57

DESIGNED F.E.H. TRACED J.A.H. REVIEWED R.K.J.
DRAWN H.R.S. CHECKED JTK APPROVED