STATE	PROJECT NUMBER	SHEET NO.	TOTAL SHEETS
GA.	NHS-0002-00(754)	81	146

REVISED: 03/05/02
REVISED AND REDRAWN: 1-07-05

SYSTEM BLOCK DIAGRAM
HUB "V" – NETWORK ELECTRONICS

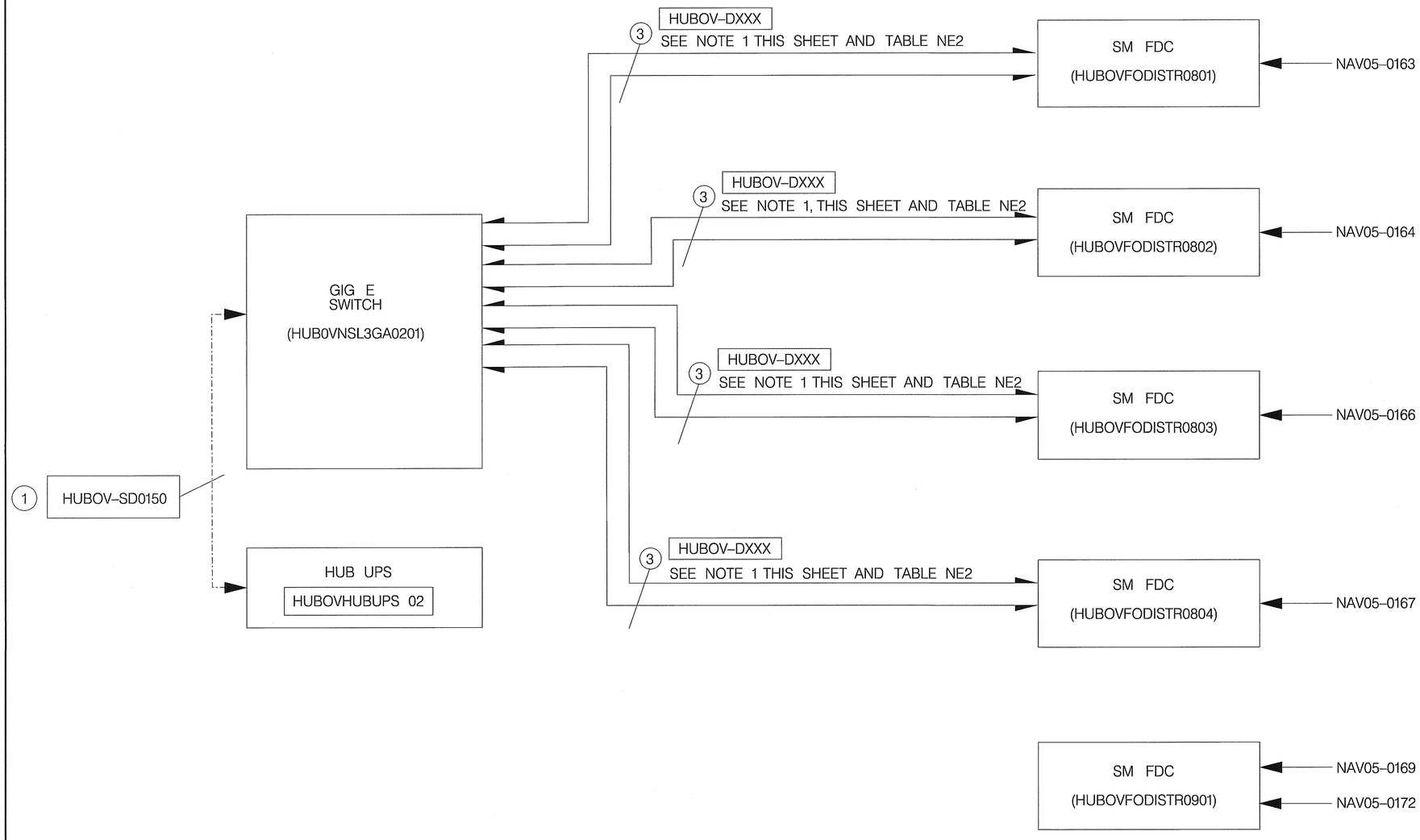

HUB V - EQUIPMENT CONFIGURATION LIST			
ITEM CODE NO.	DESCRIPTION	UNIT	QUANTITY
935-3403	FIBER OPTIC CLOSURE, FDC (RACK MOUNTED), 24 FIBER	EA	2
935-3408	FIBER OPTIC CLOSURE, FDC (RACK MOUNTED), 144 FIBER	EA	4
935-4010	FIBER OPTIC SPLICE, FUSION	EA	624
939-2211	NETWORK SWITCH, LAYER 3 GIG E, TYPE A (FOUR SM 17 DB GBIC'S)	EA	1
939-2221	GBIC ENTERPRISE ROUTING SWITCH MODULE, 8 PORT	EA	1
939-2232	GBIC, TYPE B	EA	12
939-3020	EQUIPMENT FRAME	EA	9
939-6000	HUB UNINTERRUPTIBLE POWER SUPPLY	EA	1

LEGEND

- SIMPLEX FIBER OPTIC JUMPER
- DUPLEX FIBER OPTIC JUMPER
- (X) PATCH CORD OR JUMPER QUANTITY
- HUB01XXXXXXXXXXX ID LABEL
- NETWORK DATA PATCH CORD

NOTES:

1. CONTRACTOR TO FURNISH PATCH CORD OF SUFFICIENT LENGTH TO CONNECT MUTIPLE FDC'S TO GIG E SWITCH IN RACK 2.
2. CONTRACTOR SHALL CONTACT SYSTEM ADMINISTRATOR AT (404) 635-8022 FOUR WEEKS IN ADVANCE TO COORDINATE THE INSTALLATION OF GBIC ENTERPRISE ROUTING SWITCH MODULE, 8 PORT AND GBIC, TYPE B.

	NAME	DATE		NAME	DATE
DESIGNED BY			FIRST DRAWN		
CHECKED BY			FIRST DRAWN		
SUPERVISED BY					

GEORGIA DEPARTMENT OF TRANSPORTATION

SUBMITTED BY | DATE

ATMS DESIGN
I-285 FROM I-75 SOUTH INTERCHANGE EAST TO I-20
HUB "V" NETWORK ELECTRONICS

ACCOUNT NO.
DRAWING NO.

..\cad files\sbd-hub-v.dgn