VOID

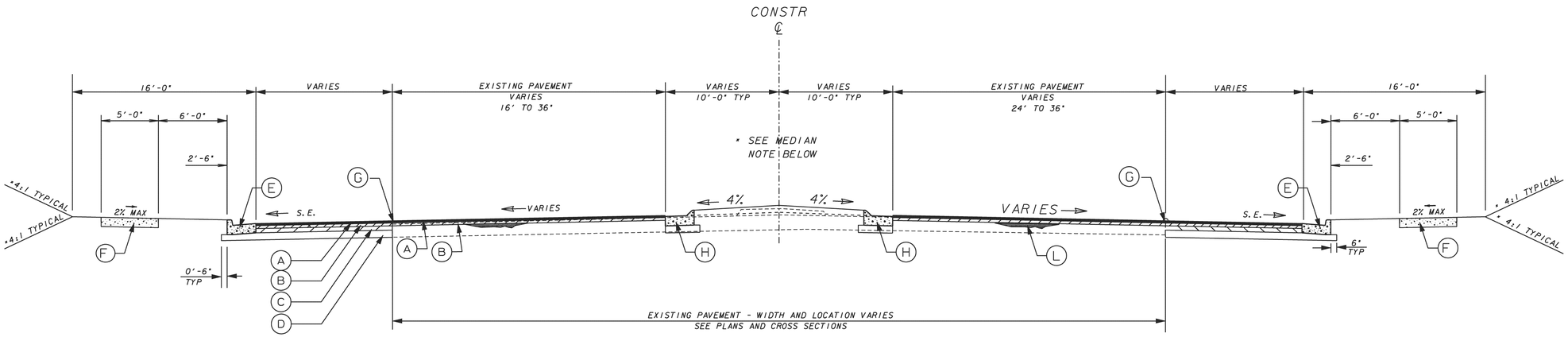


EXISTING PAVEMENT - WIDTH AND LOCATION VARIES
SEE PLANS AND CROSS SECTIONS

# TS09

## SIDE ROAD OVERLAY & WIDENING WITH NEW CURB, GUTTER & SIDEWALK (N.T.S)

JAMES BURGESS RD. STA. 121+86.00 TO STA. 124+20.00

*MEDIAN NOTES

- DOWELED CONCRETE MEDIANS TO BE UTILIZED IN LIEU OF CURB & GUTTER FOR MEDIAN WIDTHS 10 FEET OR LESS. SEE PLANS FOR LOCATIONS

SLOPE CONTROL TABLE

| SLOPE | CUT | FILL |
|---|---|---|
| 4:1 | 0-6' | 0-6' |
| 3:1 | 6'-10' | -- |
| 2:1* | OVER 10' | OVER 10' |

*GUARDRAIL TO BE INSTALLED ADJACENT TO FILL SLOPES GREATER THAN 2:1. SEE PLANS FOR LOCATIONS

REQUIRED PAVEMENT

- (A) RECYCLED ASPH CONC 12.5 MM SUPERPAVE, GP 1 OR 2, POLY MODIFIED INCL BITUM, 165 lbs/SY
- (B) RECYCLED ASPH CONC 19 MM SUPERPAVE, GP 1 OR 2, INCL BITUM, 330 lbs/SY
- (C) RECYCLED ASPH CONC 25 MM SUPERPAVE, GP 1 OR 2, INCL BITUM, 880 lbs/SY
- (D) GRADED AGGREGATE BASE, 14"
- (E) 8" x 30" CONCRETE CURB AND GUTTER, GA STD 9032B, TP2
- (F) CONCRETE SIDEWALK, 4 IN
- (G) PAVEMENT REINFORCEMENT FABRIC
- (H) 8" X 30" CONCRETE CURB & GUTTER, TP 7
- (L) LEVELING WILL BE USED AS DIRECTED BY ENGINEER
- (M) P-7 FOR PAVEMENT EDGE TREATMENT


Moreland Altobelli Associates, Inc.
2211 Beaver Ruin Road
Suite 190
Norcross, Georgia 30071
Telephone (770) 263-5945


N T S

REVISION DATES

STATE OF GEORGIA
DEPARTMENT OF TRANSPORTATION
OFFICE: ROAD DESIGN

**TYPICAL SECTIONS**

S.R. BUFORD HIGHWAY

DRAWING No. 5-07