VOID

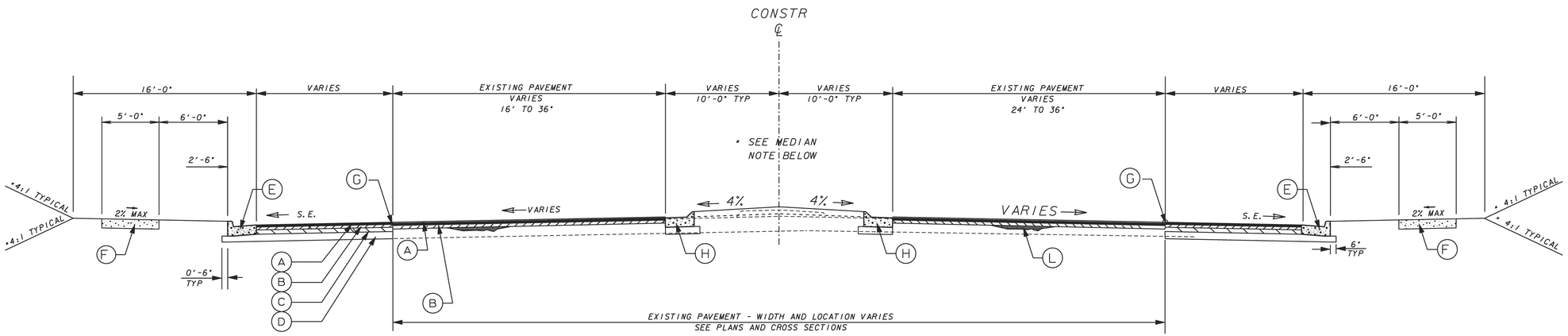

*MEDIAN NOTES

- DOWELED CONCRETE MEDIANS TO BE UTILIZED IN LIEU OF CURB & GUTTER FOR MEDIAN WIDTHS 10 FEET OR LESS. SEE PLANS FOR LOCATIONS

TS08

SIDE ROAD OVERLAY & WIDENING WITH NEW CURB, GUTTER & SIDEWALK (N.T.S)

RIVER CLUB DRIVE STA. 108+68.00 TO STA 110+31.00
WINDERMERE PKWY STA. 111+75.00 TO STA 115+40.00

SLOPE CONTROL TABLE

SLOPE	CUT	FILL
4:1	0-6'	0-6'
3:1	6'-10'	--
2:1*	OVER 10'	OVER 10'

*GUARDRAIL TO BE INSTALLED ADJACENT TO FILL SLOPES GREATER THAN 2:1. SEE PLANS FOR LOCATIONS

REQUIRED PAVEMENT

- (A) RECYCLED ASPH CONC 12.5 MM SUPERPAVE, GP 1 OR 2, POLY MODIFIED INCL BITUM, 165 lbs/SY
- (B) RECYCLED ASPH CONC 19 MM SUPERPAVE, GP 1 OR 2, INCL BITUM, 330 lbs/SY
- (C) RECYCLED ASPH CONC 25 MM SUPERPAVE, GP 1 OR 2, INCL BITUM, 880 lbs/SY
- (D) GRADED AGGREGATE BASE, 14"
- (E) 8" x 30" CONCRETE CURB AND GUTTER, GA STD 9032B, TP2
- (F) CONCRETE SIDEWALK, 4 IN
- (G) PAVEMENT REINFORCEMENT FABRIC
- (H) 8" X 30" CONCRETE CURB & GUTTER, TP 7
- (L) LEVELING WILL BE USED AS DIRECTED BY ENGINEER
- (M) P-7 FOR PAVEMENT EDGE TREATMENT

Moreland Altobelli Associates, Inc.
2211 Beaver Ruin Road
Suite 190
Norcross, Georgia 30071
Telephone (770) 263-5945

N T S

REVISION DATES

STATE OF GEORGIA
DEPARTMENT OF TRANSPORTATION
OFFICE: ROAD DESIGN

TYPICAL SECTIONS

S. R. BUFORD HIGHWAY

DRAWING No. 5-06