NOTE: MIN. 'H' IS BASED ON TYPICAL OUTSIDE DIAMETER OF CONCRETE PIPES AND MAY BE REDUCED SLIGHTLY WHERE SPECIFIED IN THE PLANS, OR AS DIRECTED BY THE ENGINEER.

PIPE SIZE	MIN.⊛ H	NORMAL W	75° SKEW W	60° SKEW W	45° SKEW W	MIN. H, IF CIRCULAR ALTER. (STD. 1040) IS USED
15"	3'-0"	2'-0"	2'-0"	2'-6"	3'-0"	3'-10"
18"	3'-6"	2'-6"	2'-6"	3'-0"	3'-6"	4'-3"
24"	4'-0"	3'-0"	3'-0"	3'-6"	4'-0"	4'-9"
30"	4'-6"	3'-6"	4'-0"	4'-0"	5'-0"	6'-2"
36"	5'-0"	4'-0"	4'-6"	5'-0"	6'-0"	6'-9"
42"	5'-6"	5'-0"	5'-0"	5'-6"	6'-6"	7'-4"
48"	6'-0"	5'-6"	5'-6"	6'-0"	7'-6"	7'-11"

⊛ FOR LONGITUDINAL PIPE OVER 18" WITH A 2'-0" DITCH, OR A LONGITUDINAL PIPE OVER 36" WITH A 4'-0" DITCH, AN ENLARGED BASE IS REDUCED TO W_1 = DITCH WIDTH WITH APPLICABLE MIN. H IN COLUMN AT EXTREME RIGHT.

PICTORIAL VIEW

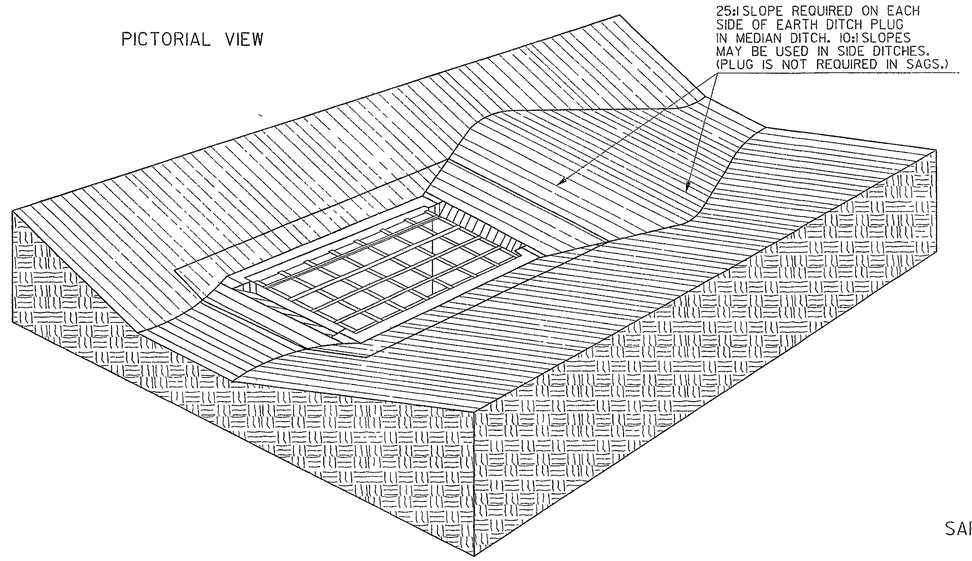

DROP INLET WITH CIRCULAR BASE			
OULET PIPE	ADAPTOR	W X W_1	GRATE SIZE (L. X W.)
TO 18"	TP. 3	2'-0" X 2'-0"	2'-0" X 2'-6"
TO 30"	TP. 2	3'-0" X 2'-0"	3'-0" X 2'-6"

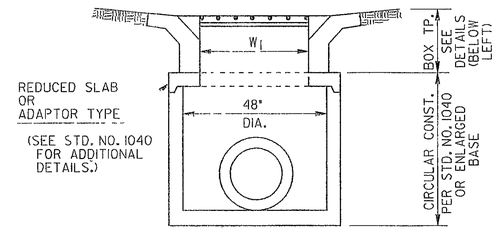

SECTION B-B FOR: CIRCULAR ALTERNATE OR ENLARGED BASE

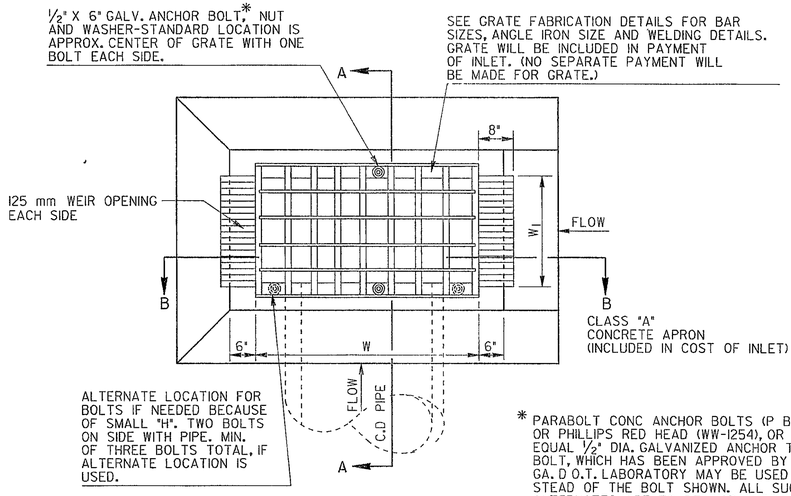

PLAN VIEW

* PARABOLT CONC ANCHOR BOLTS (P BI2-514) OR PHILLIPS RED HEAD (WW-1254), OR AN EQUAL 1/2" DIA. GALVANIZED ANCHOR TYPE BOLT, WHICH HAS BEEN APPROVED BY THE GA. D O.T. LABORATORY MAY BE USED INSTEAD OF THE BOLT SHOWN. ALL SUCH ALTERNATES ARE TO BE INSTALLED AS RECOMMENDED BY THE MANUFACTURER.

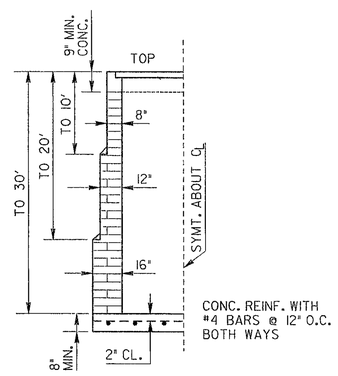

DETAIL OF DEPTH LIMITS FOR BRICK WALL THICKNESS

SAFETY GRATE FABRICATION DETAILS

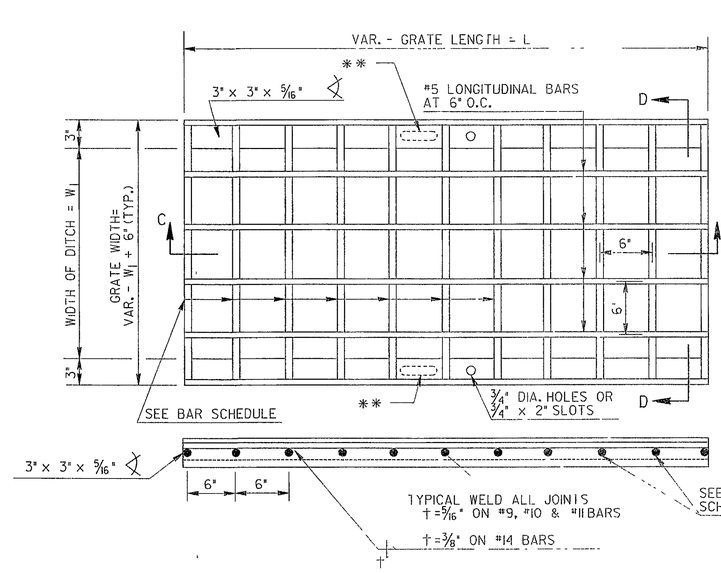

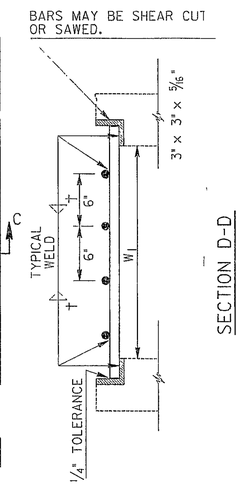

SECTION D-D

** ALTERNATE: INSTEAD OF 3/4" DIAMETER HOLE, A 2" x 3/4" OVAL HOLE MAY BE PROVIDED.

BAR SCHEDULE FOR GRATE		
W_1	GRATE TYPE	BAR SIZE
1'-6" TO 2'-0"	1	#9
2'-6"	2	#10
3'-0" TO 3'-6"	3	#11
4'-0" TO 4'-6"	4	#14

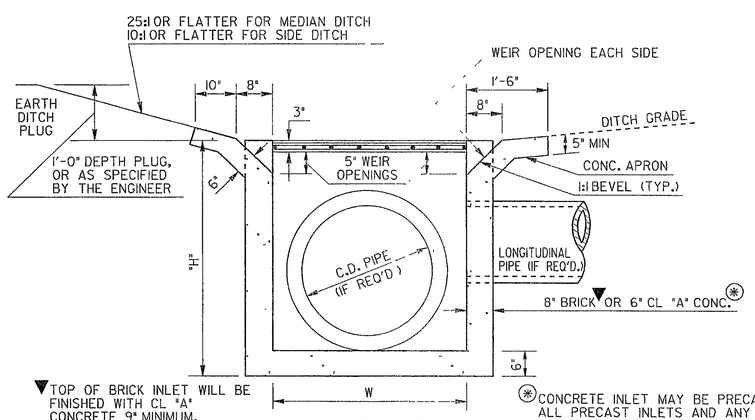

▼ TOP OF BRICK INLET WILL BE FINISHED WITH CL "A" CONCRETE 9" MINIMUM. 8" BRICK THICKNESS WILL BE INCREASED FOR 'H' OVER 10 FT. (SEE DETAIL IN MIDDLE OF SHT.)

SECTION B-B

⊛ CONCRETE INLET MAY BE PRECAST OR BUILT-IN-PLACE. ALL PRECAST INLETS AND ANY CAST-IN-PLACE CONC. INLETS WITH "H" OVER 4'-6" WILL BE REINFORCED IN ALL SIDES & BOTTOM. REINFORCING FOR BOX INLET WILL BE EITHER #4 BARS AT 12" O.C. BOTH WAYS OR 2/2, 6x6 WELDED WIRE FABRIC. ALL REINFORCING WILL HAVE 2" MIN. COVER.

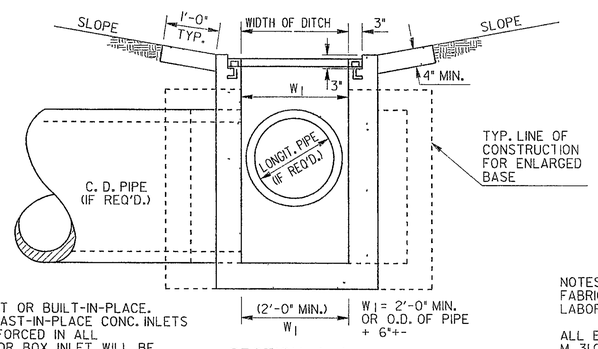

SECTION A-A

NOTES FOR GRATE:
FABRICATOR WILL ARRANGE FOR TESTING BY THE GA. D O.T. LABORATORY 14 DAYS PRIOR TO FABRICATION.

ALL BARS SHALL MEET THE REQUIREMENTS OF AASHTO M 31 GRADE 60.

ALL LONGITUDINAL BARS WILL BE #5 BARS.

GRATE BAR SPACINGS SHOWN ARE "NOMINAL-MINIMUM" AND MAY BE INCREASED (UP TO 10% TYPICAL) WITH NO ADDITIONAL PAYMENT TO PROVIDE BEST FIT FOR STRUCTURE.

REVISION	DATE	DEPARTMENT OF TRANSPORTATION STATE OF GEORGIA
		CONSTRUCTION DETAILS DITCH DROP INLET WITH FABRICATED SAFETY GRATE AND WEIR OPENINGS
		NO SCALE — OCT., 2000
BY	DES. ____ (SUBMITTED) STATE ROAD & AIRPORT DESIGN ENGR. DRW. ____ TRA. ____ (APPROVED) CHIEF ENGINEER CHK. ____	NUMBER D-4