4/30/01 9:23:06 AM \\GDOT-DSN1\GOPLOT\OCF\gord_oce9600_mylar.pcf darbyd M:\David\working\9030C.prf

| STATE | PROJECT NUMBER | SHEET NO. | TOTAL SHEETS |
|---|---|---|---|
| GA. | | 278 | 345 |

## LOCATION OF DELINEATORS ON APPROACHES TO STANDARD WIDTH BRIDGES

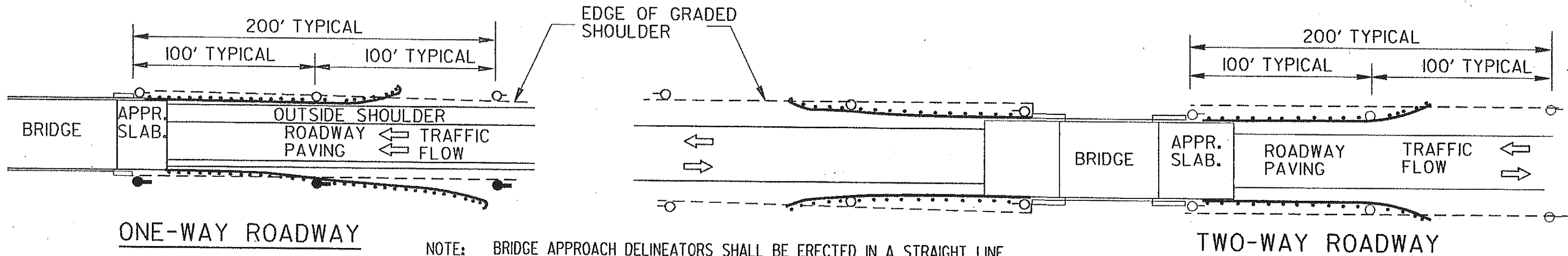


NOTE: BRIDGE APPROACH DELINEATORS SHALL BE ERECTED IN A STRAIGHT LINE BEGINNING IMMEDIATELY IN FRONT BRIDGE END POST AND FLUSH WITH BACK OF GUARDRAIL AND ENDING 2' BEYOND GRADED SHOULDER EDGE FOR A DISTANCE OF 200'. THE INTERMEDIATE DELINEATOR MAY OR MAY NOT FALL BEHIND GUARDRAIL.

NOTE:
1. BRIDGES CARRYING ONE-WAY TRAFFIC WILL REQUIRE DELINEATORS ONLY AT THE APPROACH END ON BOTH SIDES, BRIDGES CARRYING TWO-WAY TRAFFIC WILL REQUIRE DELINEATORS AT BOTH ENDS ON BOTH SIDES. FACE OF DELINEATOR WILL BE AT RIGHT ANGLES TO THE C OF ROADWAY. THREE SINGLE CRYSTAL (WHITE) REFLECTOR UNITS (TYPE I DELINEATOR) SHALL BE USED ON RIGHT SIDE OF ROADWAY AT 100 FOOT SPACING AND THREE SINGLE YELLOW REFLECTOR UNITS (TYPE I DELINEATOR) SHALL BE USED ON LEFT SIDE OF ROADWAY AT 100 FOOT SPACING ON ONE-WAY ROADWAYS ONLY, TWO-WAY ROADWAYS SHALL BE THE SAME EXCEPT COLOR SHALL BE CRYSTAL (WHITE) ON BOTH SIDES.
2. FOR DELINEATION (HARZARD MARKING) OF NARROW (NON-STANDARD WIDTH) BRIDGES APPROACHES, SEE SEPARATE PLAN DETAILS.

### RECOMMENDED SPACING FOR DELINEATORS

DELINEATORS SHOULD NORMALLY BE SPACED 528' APART. WHERE SUCH IS INTERRRUPTED BY DRIVEWAYS, CROSSROADS, ETC., AND WHERE UNDER THE NORMAL SPACING, A DELINEATOR WOULD FALL WITHIN SUCH AN AREA, THAT DELINEATOR MAY BE MOVED IN EITHER DIRECTION A DISTANCE NOT EXCEEDING 1/4 (132') OF THE NORMAL SPACING. IF SUCH DELINEATOR STILL FALLS WITHIN THAT AREA, IT SHOULD BE ELIMINATED. SEE TABLE BELOW FOR RECOMMENDED SPACING OF HORIZONTAL CURVES.

### TABLE SPACING (1) FOR DELINEATORS ON HORIZONTAL CURVES

| RADIUS OF CURVE (IN FEET) | SPACING ON CURVE (IN FEET) | SPACING IN ADVANCE & BEYOND CURVE (IN FEET) (MAINLINE ONLY) | | |
|---|---|---|---|---|
| | | 1ST | 2ND | 3RD |
| 50 | 20 | 40 | 65 | 125 |
| 150 | 30 | 60 | 90 | 180 |
| 200 | 35 | 70 | 110 | 215 |
| 250 | 40 | 85 | 125 | 250 |
| 300 | 50 | 95 | 145 | 290 |
| 400 | 55 | 110 | 170 | 300 |
| 500 | 65 | 125 | 190 | 300 |
| 600 | 70 | 140 | 210 | 300 |
| 700 | 75 | 150 | 230 | 300 |
| 800 | 80 | 165 | 245 | 300 |
| 900 | 85 | 175 | 260 | 300 |
| 1000 | 90 | 185 | 275 | 300 |

(1) SPACING, S, FOR SPECIFIC RADII NOT SHOWN MAY BE INTERPOLATED FROM THE TABLE OR COMPUTED FROM THE FORMULA $S=3\sqrt{R-50'}$, WHERE R IS THE RADIUS OF CURVATURE IN FT. AND S IS ROUNDED TO THE NEAREST 5 FT. THE SPACING TO THE FIRST DELINEATOR IN ADVANCE OF THE CURVE IS 2S, TO THE SECOND 3S, AND THE THIRD 6S, BUT NONE TO EXCEED 300 FEET, MINIMUM SPACING IS 20 FEET.

## LOCATION OF DELINEATORS ON FREEWAY & EXPRESSWAY TYPE HIGHWAYS

TYPES OF DELINEATORS, ERECTION LOCATION, AND SPACING SHALL BE AS FOLLOWS.

- ○ SINGLE CRYSTAL (WHITE) REFLECTOR UNITS (TYPE I DELINEATOR) ON RIGHT SIDE OF MAINLINE AT 528 FOOT SPACING & ON RT. SIDE OF RAMP TGT. SECTIONS AT 100 FOOT SPACING FROM PHYSICAL CORE TO RAMP TERMINUS.
- ○○ DOUBLE CRYSTAL (WHITE) REFLECTOR UNITS (TYPE 2 DELINEATOR) ON RIGHT SIDE OF SPEED CHANGE (ACCELERATION & DECELERATION) LANES THAT ARE ON RIGHT SIDE OF MAINLINE AT 100 FOOT SPACING FROM TAPER TO PHYSICAL CORE.
- ● (YELLOW) SINGLE YELLOW REFLECTOR UNITS (TYPE I DELINEATOR) ON LEFT SIDE OF RAMP HORIZONTAL CURVES & ON LEFT SIDE OF MAINLINE HORIZONTAL CURVES GREATER THAN 3^ CURVATURE.
- ●● (YELLOW) DOUBLE YELLOW REFLECTOR UNITS (TYPE 2 DELINEATOR) ON LEFT SIDE OF SPEED CHANGE (ACCELERATION & DECELERATION) LANES THAT ARE ON LEFT SIDE OF MAINLINE AT 100 FOOT SPACING FROM TAPER TO PHYSICAL CORE.
- ● (RED) SINGLE REFLECTOR UNITS (TYPE I DELINEATOR) ON LEFT SIDE OF EXIT RAMPS AT 100 FOOT SPACING FROM "WRONG WAY" SIGN TO RAMP TERMINUS. USE TYPE IA RED DELINEATORS ON RIGHT OR LEFT SIDE OF EXIT RAMPS WHERE TYPE I WHITE OR YELLOW DELINEATORS ARE USED FACE OF RED DELINEATORS ORIENTED OPPOSITE TO NORMAL TRAFFIC FLOW.

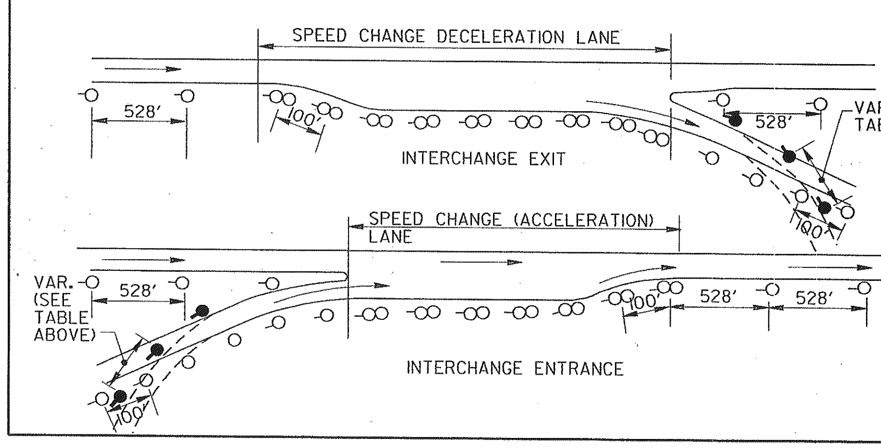


## LOCATION OF DELINEATORS/OBJECT MARKERS AT CULVERT ENDS

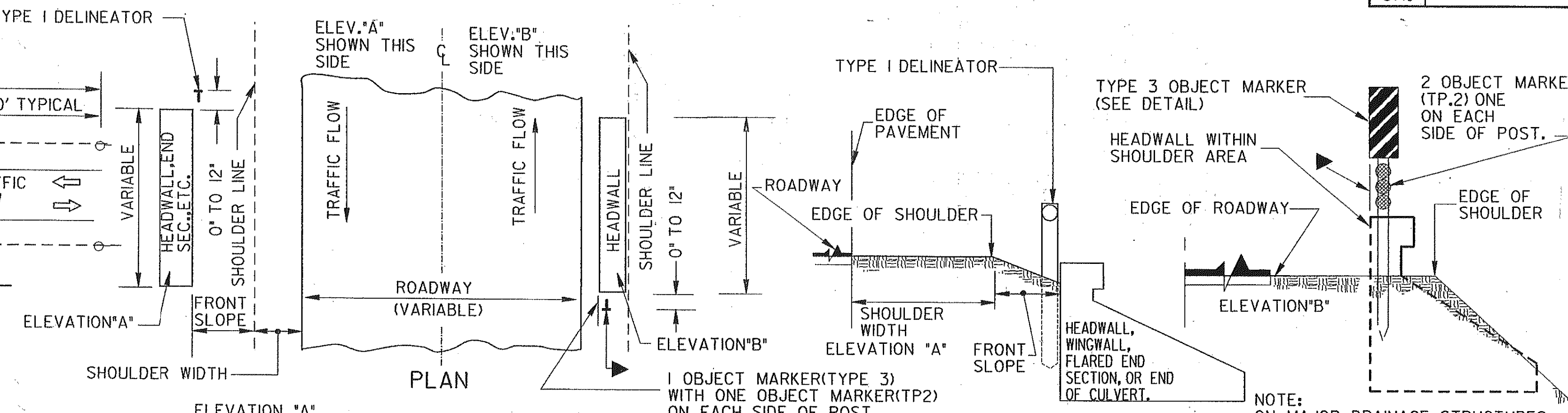


ELEVATION "A"
ONE DELINEATOR (TYPE I) SHALL BE USED WHERE HEADWALLS, FLARED END SECTIONS, OR CULVERT ENDS ARE LOCATED WITHIN THE FRONT SLOPE AS SHOWN IN ELEVATION "A" DETAIL.

ELEVATION "B"
A COMBINATION OF ONE OBJECT MARKER (TYPE 3) AND TWO OBJECT MARKERS (TYPE 2), ONE ON EACH SIDE OF THE POST, SHALL BE USED WHERE HEADWALLS OF CULVERTS ARE LOCATED WITHIN THE EXISTING SHOULDER AREA AS SHOWN IN ELEVATION "B" DETAIL.

▶ = THE INSIDE EDGE OF THE MARKER SHALL BE IN LINE WITH THE INNER EDGE OF THE OBSTRUCTION

NOTE:
ON MAJOR DRAINAGE STRUCTURES ON FEDERAL RESURFACING PROJECTS, WHEN ELEVATION "B" EXISTS, THE FIELD REVIEW TEAM WILL RECOMMEND WHICH TO USE; GUARDRAIL, ADDITIONAL DELINEATION, OR EXTENSION OF DRAINAGE STRUCTURE.

## DELINEATOR ERECTION DETAILS

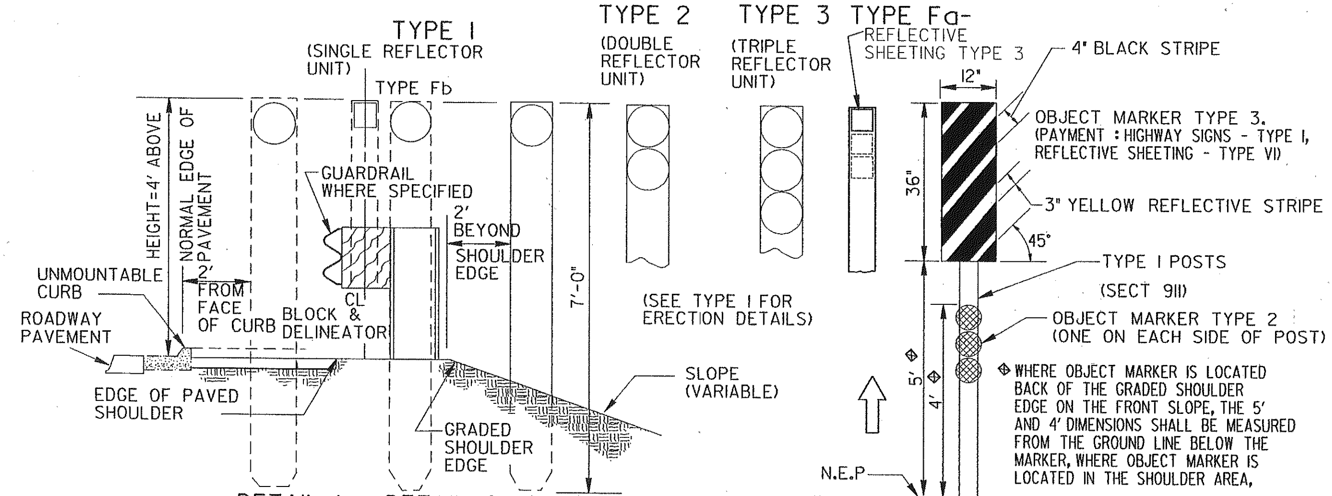


◈ WHERE OBJECT MARKER IS LOCATED BACK OF THE GRADED SHOULDER EDGE ON THE FRONT SLOPE, THE 5' AND 4' DIMENSIONS SHALL BE MEASURED FROM THE GROUND LINE BELOW THE MARKER, WHERE OBJECT MARKER IS LOCATED IN THE SHOULDER AREA,

THE 5' AND 4' DIMENSIONS SHALL BE MEASURED FROM THE NORMAL EDGE OF ROADWAY PAVING OF THE NEAREST TRAFFIC LANE.

### DETAIL OF OBJECT MARKER

NOTE : ERECTION DETAILS ABOVE ARE TYPICAL FOR ALL TYPES EXCEPT 1A, 2A, 3A, & Fb, WHICH ARE MOUNTED ON THE POST OR STRUCTURE ALREADY IN PLACE.

DETAIL 1: ERECTION FOR ROADWAYS HAVING UNMOUNTABLE CURBS.

DETAIL 2: ERECTION FOR ROADWAY WITH GUARDRAIL, DELINEATOR POST SHALL BE IN THE SAME PLANE AS FACE OF GUARDRAIL POSTS, EXCEPT FOR TYPE Fb, AS SHOWN, AND POSSIBLY AT BRIDGE ENDS AS INDICATED ABOVE.

DETAIL 3: ERECTION FOR ROADWAYS HAVING SHOULDERS (WITHOUT CURBS). WITH MOUNTABLE CURBS, ERECTION SHALL BE SAME AS DETAIL 3.

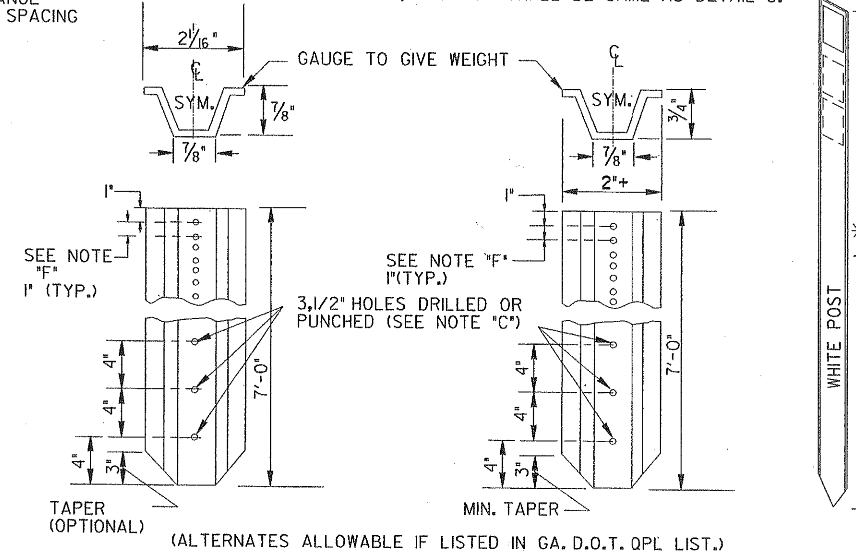


(ALTERNATES ALLOWABLE IF LISTED IN GA. D.O.T. QPL LIST.)

STEEL FLANGED "U" CHANNEL POST (1.12 LBS./FT.) (GALVANIZED)

ALUMINUM FLANGED "U" CHANNEL POST (0.78 LBS/FT.)

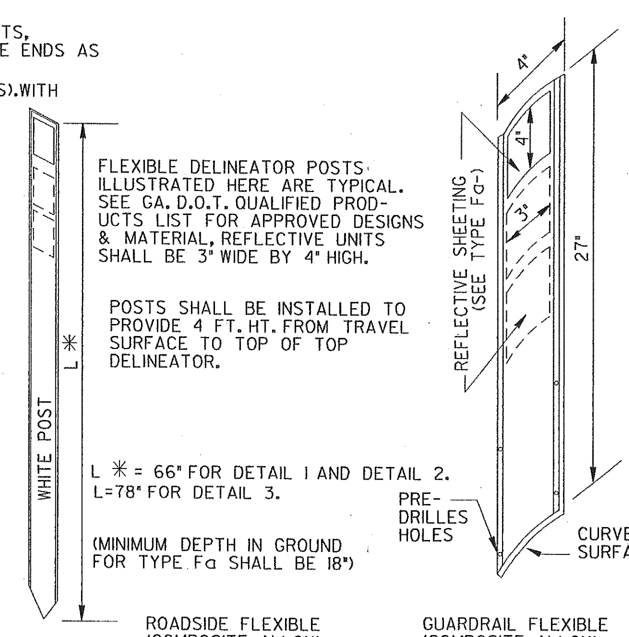


FLEXIBLE DELINEATOR POSTS ILLUSTRATED HERE ARE TYPICAL. SEE GA. D.O.T. QUALIFIED PRODUCTS LIST FOR APPROVED DESIGNS & MATERIAL, REFLECTIVE UNITS SHALL BE 3" WIDE BY 4" HIGH.

POSTS SHALL BE INSTALLED TO PROVIDE 4 FT. HT. FROM TRAVEL SURFACE TO TOP OF TOP DELINEATOR.

L ✱ = 66" FOR DETAIL 1 AND DETAIL 2.
L=78" FOR DETAIL 3.

(MINIMUM DEPTH IN GROUND FOR TYPE Fa SHALL BE 18")

ROADSIDE FLEXIBLE (COMPOSITE ALLOY) DELINEATOR POST
- TYPE Fa-1 (ONE REFLECT.)
- TYPE Fa-2 (TWO REFLECT.)
- TYPE Fa-3 (THREE REFLECT.)

GUARDRAIL FLEXIBLE (COMPOSITE ALLOY) DELINEATOR POST
- TYPE Fb-1 (ONE REFLECT.)
- TYPE Fb-2 (TWO REFLECT.)
- TYPE Fb-3 (THREE REFLECT.)

## TYPES OF DELINEATORS

TYPE 1 - ALUMINUM OR GALVANIZED STEEL FLANGED "U" CHANNEL POST WITH SINGLE REFLECTOR UNIT. REFLECTOR UNIT TO CONSIST OF: (A) ONE 3" DIAMETER SEALED PRISMATIC REFLEX REFLECTOR WITH PLATE AND FRAME, OR, (B) ONE 4" X 5" RECTANGULAR TYPE I, LEVEL A REFLECTIVE SHEETING REFLECTOR WITH PLATE AND FRAME, OR (C) ONE 3 1/4" DIAMETER CENTER MOUNT SEALED PRISMATIC REFLEX REFLECTOR HOUSED IN ALUMINUM BACKING WITH SINGLE GROMMETTED HOLE IN CENTER OF REFLECTOR.

TYPE 2 - ALUMINUM OR GALVANIZED STEEL FLANGED "U" CHANNEL POST WITH DOUBLE REFLECTOR UNIT. REFLECTOR UNIT TO CONSIST OF: (A) TWO 3" DIAMETER SEALED PRISMATIC REFLEX REFLECTORS WITH PLATE AND FRAME, OR, (B) TWO 4" X 5" RECTANGULAR TYPE I, LEVEL A REFLECTIVE SHEETING REFLECTORS WITH PLATE AND FRAME, OR (C) TWO 3 1/4" DIAMETER CENTER MOUNT SEALED PRISMATIC REFLEX REFLECTOR HOUSED IN ALUMINUM BACKING WITH SINGLE GROMMETTED HOLE IN CENTER OF EACH REFLECTOR.

TYPE 3 - ALUMINUM OR GALVANIZED STEEL FLANGED "U" CHANNEL POST WITH TRIPLE REFLECTOR UNIT. REFLECTOR UNIT TO CONSIST OF: (A) THREE 3" DIAMETER SEALED PRISMATIC REFLEX REFLECTORS WITH PLATE AND FRAME, OR, (B) THREE 4" X 5" RECTANGULAR TYPE I, LEVEL A REFLECTIVE SHEETING REFLECTORS WITH PLATE AND FRAME, OR (C) THREE 3 1/4" DIAMETER CENTER MOUNT SEALED PRISMATIC REFLEX REFLECTORS HOUSED IN ALUMINUM BACKING WITH SINGLE GROMMETTED HOLE IN CENTER OF EACH REFLECTOR.

TYPE 1A-SINGLE, TYPE 2A- DOUBLE, TYPE 3A- TRIPLE } REFLECTOR UNIT ONLY MOUNTED ON POST OR STRUCTURE ALREADY IN PLACE. REFLECTOR UNIT SAME AS FOR TYPE 1, 2, AND 3, RESPECTIVELY.

TYPE Fa -, TYPE Fb - } FLEXIBLE DELINEATOR POSTS SHALL BE USED AT LOCATIONS WHERE HIGH FREQUENCY OF HITS ARE CONTEMPLATED, SUCH AS GORE AREAS, OUTSIDE OF SHARP CURVES, ETC., AND MAY ALSO BE USED AS ALTERNATIVES TO EITHER TYPE 1, TYPE 2, OR TYPE 3 DELINEATORS WHEN SPECIFIED ON THE PLANS. DIFFERENT DESIGN FLEXIBLE DELINEATORS PERMITTED, IF APPROVED BY THE GA. D.O.T. OFFICE OF MATERIALS AND RESEARCH.

GENERAL NOTES:

A- SPECIFICATIONS: GA. STANDARD, CURRENT EDITION, & SUPPLEMENTS THERETO.

B- REFLECTORS FOR TYPES 1 AND 1A SHALL BE CRYSTAL (WHITE). YELLOW OR RED, AS SPECIFIED ON THE PLANS. REFLECTORS FOR TYPES 2 AND 2A SHALL BE CRYSTAL (WHITE) OR YELLOW AS SPECIFIED ON THE PLANS. REFLECTORS FOR TYPE 3 AND 3A SHALL BE YELLOW ONLY AS SPECIFIED ON THE PLANS.

C- WHEN POSTS ARE SET IN CONCRETE, METAL RODS SHALL BE INSERTED IN 3,1/2" DIA. HOLES LOCATED AT BOTTOM OF POST. MIN SIZE OF RODS SHALL BE 1/4" DIA. X 3" LONG.

D- MONODIRECTIONAL DELINEATORS SHALL BE USED AND ERECTED AT THE RECOMMENDED SPACING, UNLESS OTHERWISE SPECIFIED ON THE PLANS.

E- FOR ADDITIONAL DATA ON DELINEATORS, REFER TO THE MANUAL ON UNIFORM TRAFFIC CONTROL DEVICES AND ALL SUPPLEMENTS THERETO.

F- DRILL OR PUNCH 17,3/8" DIA. HOLES ON 1" CENTERS FOR A DISTANCE OF 17" MINIMUM FROM TOP POST.

41-25

DEPARTMENT OF TRANSPORTATION
STATE OF GEORGIA

# STANDARD DELINEATORS & MARKERS AND ALTERNATE POSTS

NO SCALE — REV. & REDR. MAR., 2001

DATE / REVISION / BY

DES. ____ REV. ____ TRA. ____ CHK. ____

(SUBMITTED) STATE ROAD & AIRPORT DESIGN ENGR.
(APPROVED) CHIEF ENGINEER

NUMBER 9030C

4/30/01 9:23:06 AM \\GDOT-DSN1\GOPLOT\OCF\gord_oce9600_mylar.pcf darbyd M:\David\working\9030C.prf GO-RD6