STATE	PROJECT NUMBER	SHEET NO.	TOTAL SHEETS
GA.	STP00-0001-00(817)	1042	1049

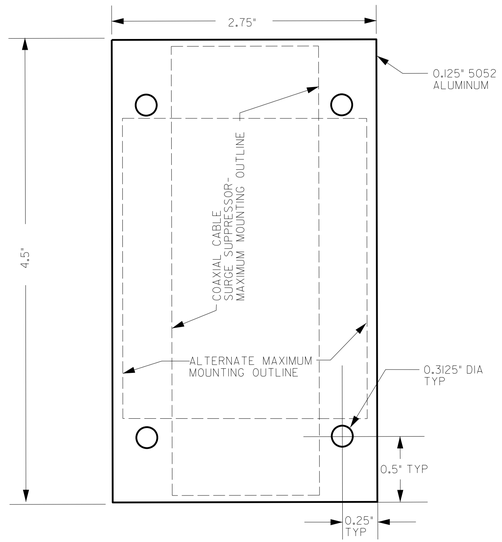

ALL DIMENSIONS ± 0.05" TOLERANCE

COAXIAL CABLE SURGE SUPPRESSOR MOUNTING PLATE

NTS

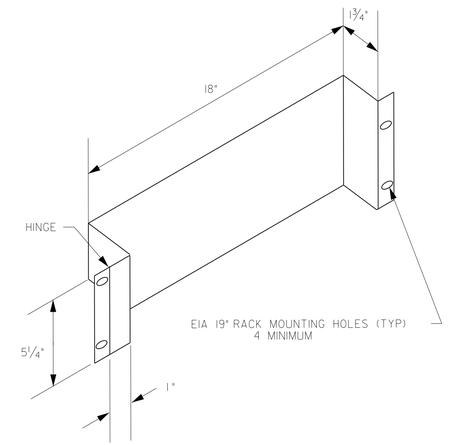

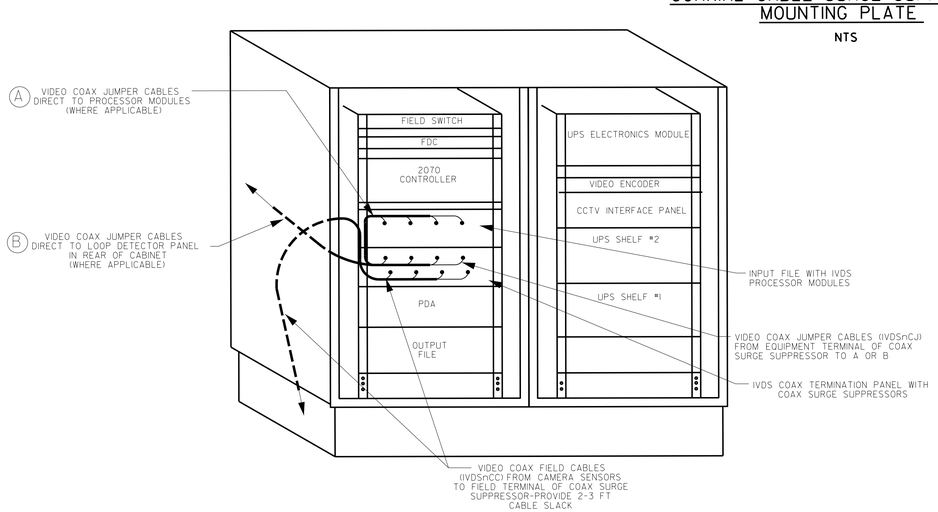

CL4D CABINET-FRONT VIEW

NTS

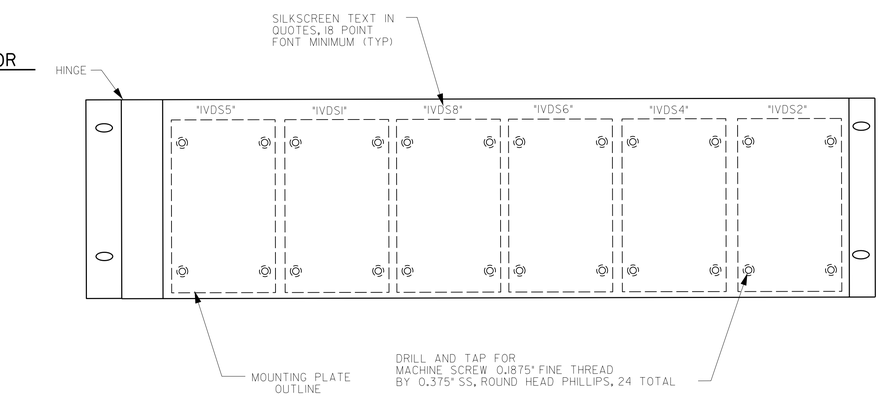

NOTE: FURNISH 6 MOUNTING PLATES AND 24 MOUNTING PLATE SCREWS WITH EACH PANEL

COAXIAL TERMINATION PANEL- CL4D CABINET

NTS

NOT TO SCALE

DATE	REVISIONS	DATE	REVISIONS

CLAYTON COUNTY DETAIL

IVDS DETAILS
COAX TERMINATION PANEL

$FILE$
$DATE$