STATE	PROJECT NUMBER	SHEET NO.	TOTAL SHEETS
GA.	STP00-0001-00(769)	307	434

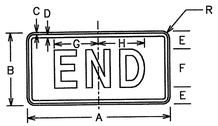

M4-6

SIGN	DIMENSIONS (INCHES)								
	A	B	C	D	E	F	G	H	R
STD & MIN	24	12	3/8	5/8	3	6D	7	7 1/4	1 1/2
SPECIAL	30	15	3/8	5/8	3 1/2	8D	9 1/4	9 3/4	1 1/2

COLORS

LEGEND & BORDER - BLACK (NON-REFL)
BACKGROUND - WHITE (REFL)

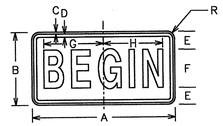

M10-5

SIGN	DIMENSIONS (INCHES)								
	A	B	C	D	E	F	G	H	R
STD & MIN	24	12	3/8	5/8	3	6C	9 1/2	9 1/2	1 1/2
SPECIAL	30	15	3/8	5/8	3 1/2	8C	12 1/2	12 1/2	1 1/2

COLORS

LEGEND & BORDER - BLACK (NON-REFL)
BACKGROUND - WHITE (REFL)

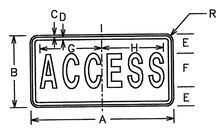

M10-6

SIGN	DIMENSIONS (INCHES)								
	A	B	C	D	E	F	G	H	R
STD & MIN	24	12	3/8	5/8	3	6C	*10 1/2	*10 1/2	1 1/2
SPECIAL	30	15	3/8	5/8	4	7C	**13	**13	1 1/2

*REDUCE INTER-LETTER SPACING 78%
**REDUCE INTER-LETTER SPACING 50%

COLORS

LEGEND & BORDER - BLACK (NON-REFL)
BACKGROUND - WHITE (REFL)

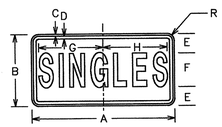

M10-7

SIGN	DIMENSIONS (INCHES)								
	A	B	C	D	E	F	G	H	R
STD & MIN	24	12	3/8	5/8	3 1/2	5C	*10 1/2	*10 1/2	1 1/2
SPECIAL	30	15	3/8	5/8	4	7C	**13	**13	1 1/2

*REDUCE INTER-LETTER SPACING 25%
**REDUCE INTER-LETTER SPACING 55%

COLORS

LEGEND & BORDER - BLACK (NON-REFL)
BACKGROUND - WHITE (REFL)

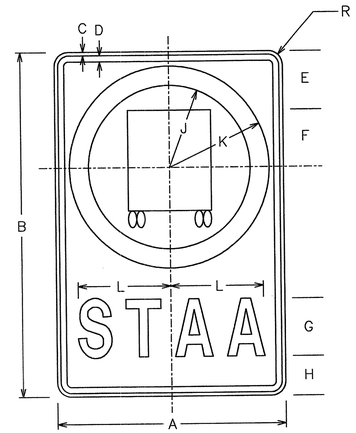

R14-4a

SIGN	DIMENSIONS (INCHES)											
	A	B	C	D	E	F	G	H	J	K	L	R
STD & MIN	24	36	3/8	5/8	6	6	6D	4 1/4	10 1/2	8 1/2	9 3/4	1 1/2
SPECIAL	30	48	1/2	3/4	7	8	8D	6 5/8	13 1/8	10 5/8	13	1 7/8
SPECIAL	36	60	5/8	7/8	8 1/2	9 1/2	10C	8 7/8	15 3/4	12 3/4	13	2 1/4
SPECIAL	48	72	3/4	1 1/4	12	12	12D	8 1/2	21	17	19 1/2	3

COLORS

LEGEND, SYMBOL, BORDER - BLACK (NON-REFL)
BACKGROUND - WHITE (REFL)
CIRCLE - GREEN (REFL)

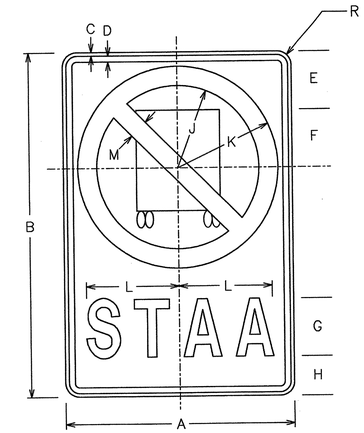

R14-5a

SIGN	DIMENSIONS (INCHES)											
	A	B	C	D	E	F	G	H	J	K	L	M	R
STD & MIN	24	36	3/8	5/8	6	6	6D	4 1/4	10 1/2	8 1/2	9 3/4	2	1 1/2
SPECIAL	30	48	1/2	3/4	7	8	8D	6 5/8	13 1/8	10 5/8	13	2 1/2	1 7/8
SPECIAL	36	60	5/8	7/8	8 1/2	9 1/2	10C	8 7/8	15 3/4	12 3/4	13	3	2 1/4
SPECIAL	48	72	3/4	1 1/4	12	12	12D	8 1/2	21	17	19 1/2	4	3

COLORS

LEGEND, SYMBOL, BORDER - BLACK (NON-REFL)
BACKGROUND - WHITE (REFL)
CIRCLE & DIAGONAL - RED (REFL)

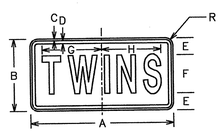

M10-8

SIGN	DIMENSIONS (INCHES)								
	A	B	C	D	E	F	G	H	R
STD & MIN	24	12	3/8	5/8	3	6C	9 1/2	9 1/2	1 1/2
SPECIAL	30	15	3/8	5/8	3 1/2	8C	12 1/2	12 1/2	1 1/2

COLORS

LEGEND & BORDER - BLACK (NON-REFL)
BACKGROUND - WHITE (REFL)

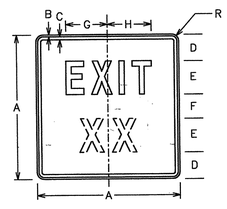

M10-9

SIGN	DIMENSIONS (INCHES)								
	A	B	C	D	E	F	G	H	R
STD & MIN	24	3/8	5/8	4	6D	4	7 3/4	8 1/4	1 1/2
SPECIAL	30	3/8	5/8	5 1/2	7D	5	8 3/4	9 1/4	1 1/2

NOTE: OPTICALLY SPACE EXIT NUMBER ABOUT VERTICAL CENTERLINE

COLORS

LEGEND & BORDER - BLACK (NON-REFL)
BACKGROUND - WHITE (REFL)

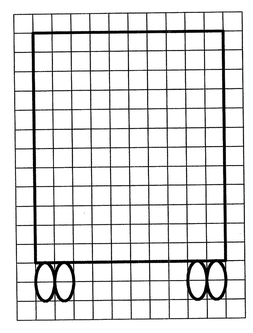

DATE	REVISIONS

GEORGIA DEPARTMENT OF TRANSPORTATION
OFFICE OF TRAFFIC SAFETY & DESIGN

DETAILS OF
TRUCK RESTRICTION SIGNS

NO SCALE FEBRUARY 2000

PCBDTB

\\signal se01s1\1\05\esse dgn Jul 02, 2003 15:10:14