STATE	PROJECT NUMBER	SHEET NO.	TOTAL SHEETS
GA.	BR000-0001-00(370)	85	146

VOID

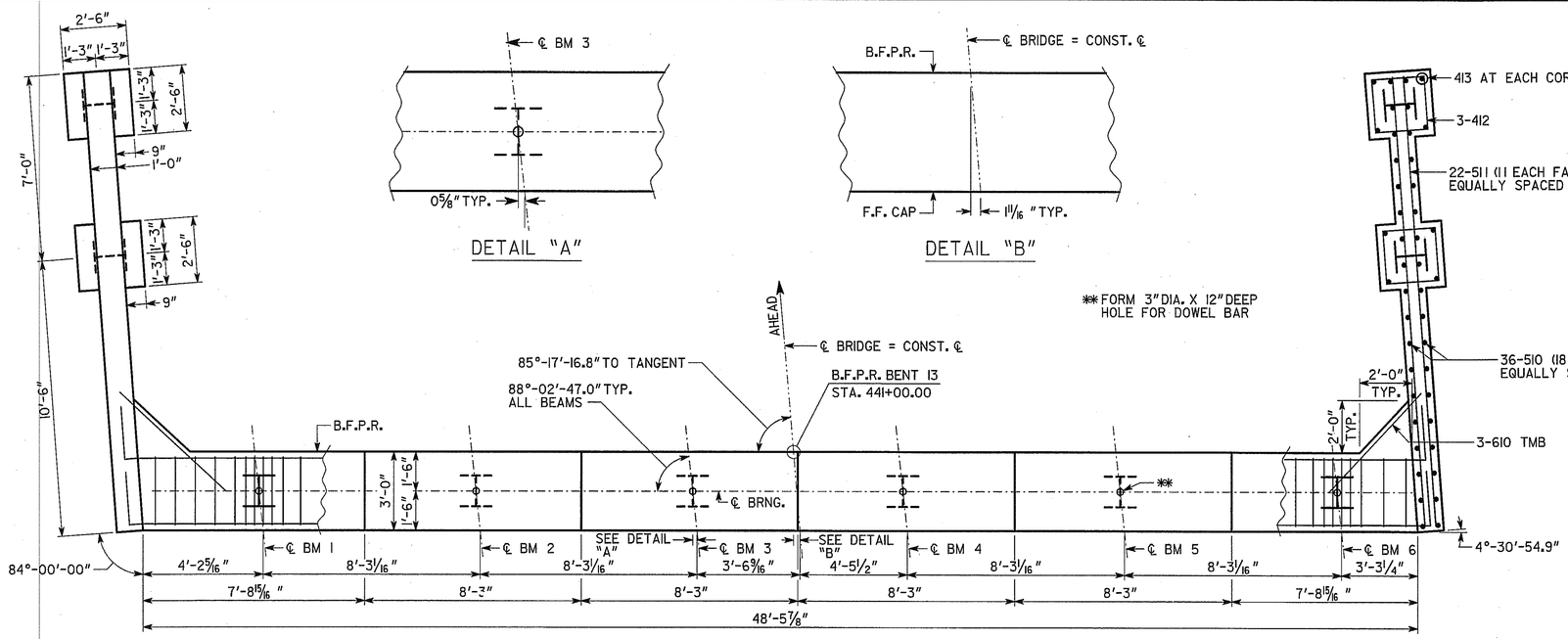

PLAN

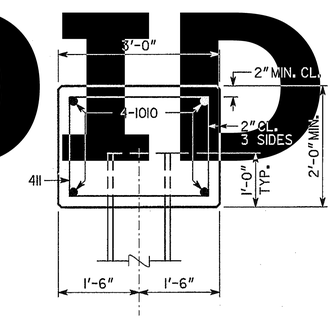

SECTION A-A
(NO SCALE)

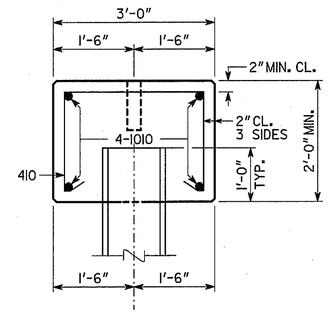

SECTION B-B
(NO SCALE)

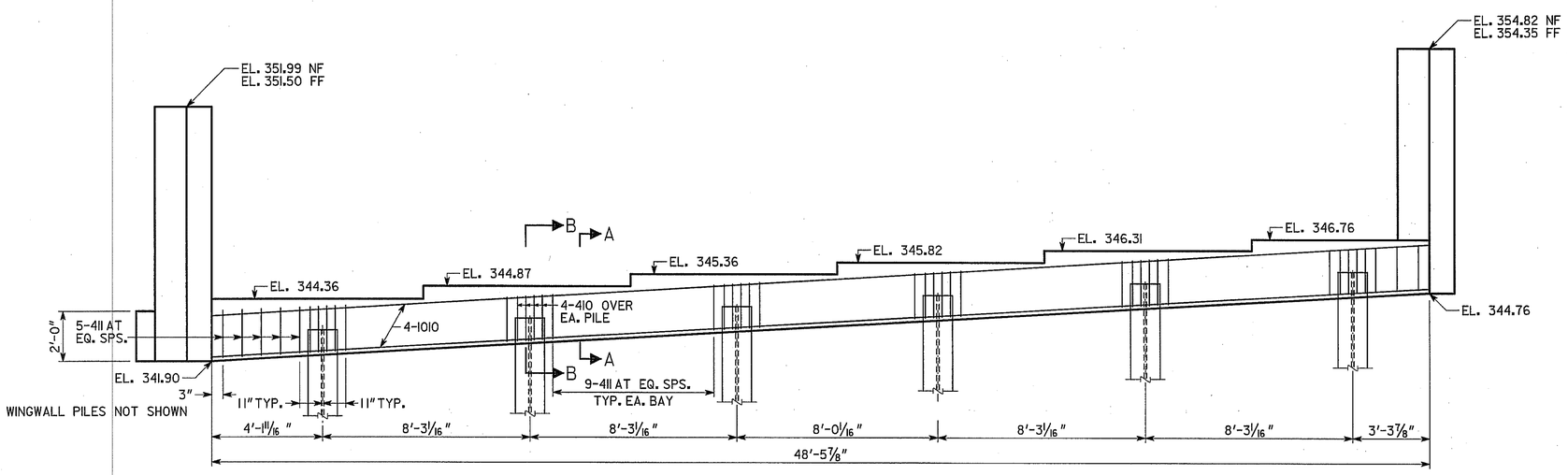

ELEVATION
BENT 13
(LOOKING AHEAD)

PLAN DRIVING OBJECTIVE

ALL PILES SHALL BE DRIVEN TO A DRIVING RESISTANCE OF 129 TONS AFTER A MINIMUM TIP ELEVATION OF 305 IS ACHIEVED.

ALL PILES SHALL BE STEEL H, HP 14 X 102

SUBSTRUCTURE QUANTITIES	
ITEM	BENT 13
CU YD CLASS "AA" CONCRETE	26.2
LB BAR REINFORCEMENT STEEL	3014

NOTES:

1. POUR WINGWALLS MONOLITHICALLY WITH CAP.
2. MAINTAIN 2" CL. ON ALL REINFORCEMENT UNLESS OTHERWISE NOTED.
3. WINGWALL PILES NOT SHOWN IN ELEVATION VIEW.
4. SEE GA. STD. 9037 FOR DRAINAGE DETAILS AT END BENTS.

BRIDGE NO. 1

GEORGIA
DEPARTMENT OF TRANSPORTATION
PRECONSTRUCTION DIVISION-OFFICE OF BRIDGE DESIGN

END BENT 13 DETAILS
S.R. 43 (U.S. 378) OVER THE SAVANNAH RIVER
LINCOLN COUNTY BR000-0001-(370)

SCALE: 3/8" = 1'-0" UNLESS NOTED FEBRUARY 2009

REVISIONS	DATE	BY

BRIDGE SHEET 20 OF 24

DESIGNED J.H.-D. | CHECKED P.S.R. | REVIEWED W.E.L./W.M.D.
DRAWN E.M.M. | DESIGN GROUP P.S.R. | APPROVED P.V.L.

ENDBTIE.DGN