STATE	PROJECT NUMBER	SHEET NO.	TOTAL SHEETS
GA.	BR000-0001-00(370)	70	146

VOID

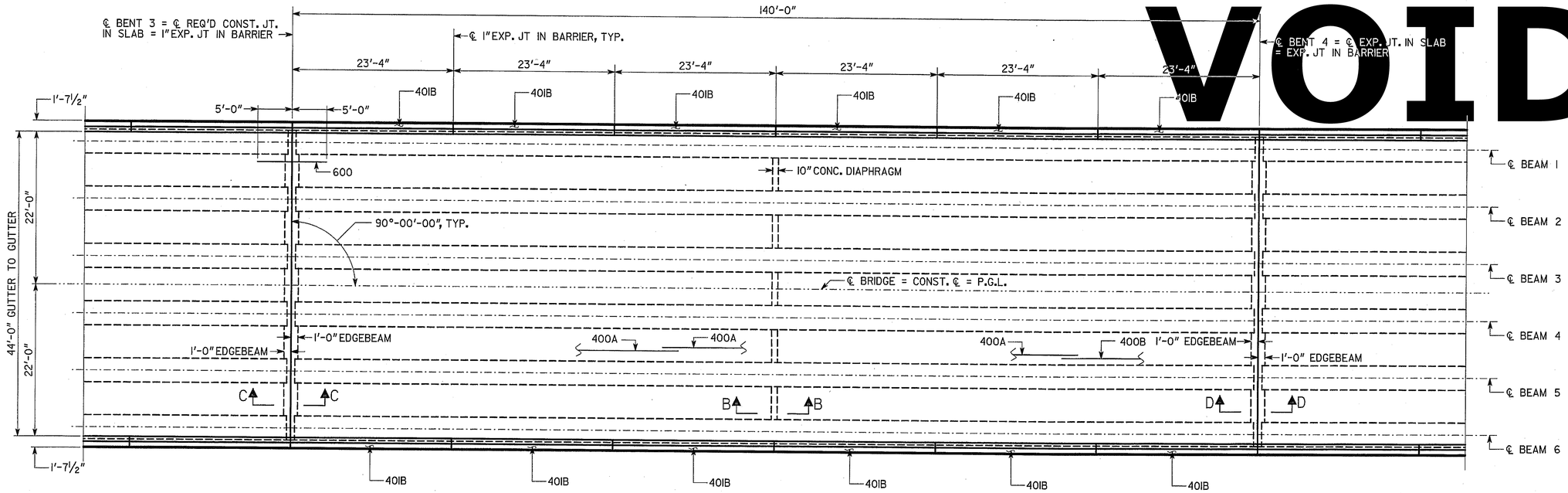

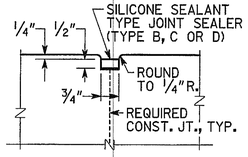

DETAIL "A"

PLAN-SPAN 2
(SPAN 4, 6, 8, 10 SIMILAR)

PLAN - SPAN 3
(SPAN 5, 7, 9, 11 SIMILAR)

PLAN-SPAN 4

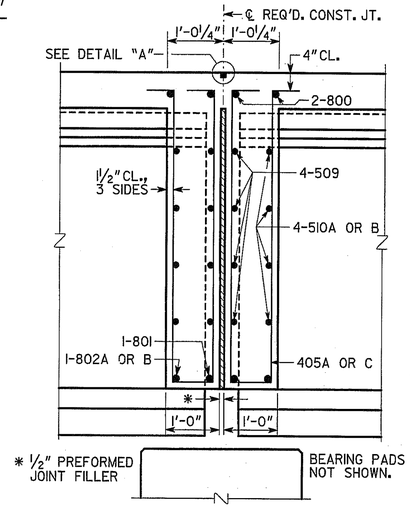

SLAB REINFORCEMENT NOT SHOWN.
BAR 405B NOT SHOWN

SECTION C-C
NO SCALE
(BENTS 3, 5, 7, 9, 11 AND 12)

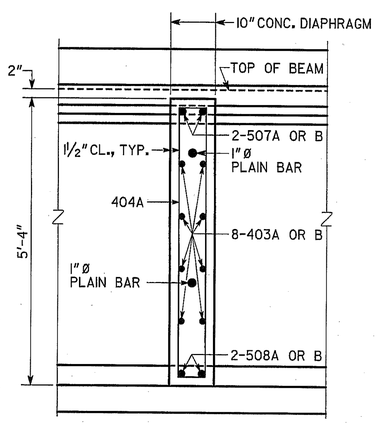

SLAB REINFORCEMENT NOT SHOWN.
BAR 404B NOT SHOWN

SECTION B-B
NO SCALE

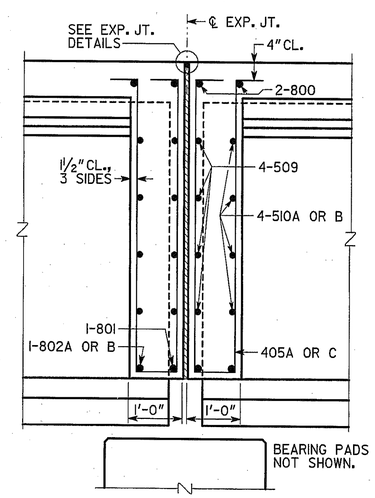

SLAB REINFORCEMENT NOT SHOWN.
BAR 405B NOT SHOWN

SECTION D-D
NO SCALE
(BENTS 4, 6, 8 AND 10)

TEMP.	W
30°	2"
60°	1⅜"
90°	¾"

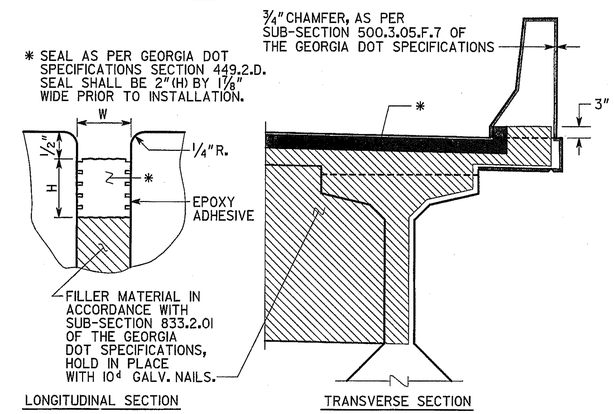

LONGITUDINAL SECTION

TRANSVERSE SECTION

EXPANSION JOINT DETAILS

BRIDGE NO. 1

GEORGIA
DEPARTMENT OF TRANSPORTATION
PRECONSTRUCTION DIVISION-OFFICE OF BRIDGE DESIGN

DECK PLAN DETAILS - SPANS 2 THRU 11
S.R. 43 (U.S. 378) OVER THE SAVANNAH RIVER
LINCOLN COUNTY BR000-0001-00(370)

SCALE: ⅛" = 1'-0" (UNLESS NOTED) FEBRUARY 2009

BY	REVISIONS	DATE

BRIDGE SHEET 5 OF 24

DESIGNED J.H.-D.	CHECKED P.S.R.	REVIEWED W.E.I./W.M.D.
DRAWN S.M.H./E.M.M.	DESIGN GROUP P.S.R.	APPROVED P.V.L.

LINCOLN.DGN