STATE	PROJECT NUMBER	SHEET NO.	TOTAL SHEETS
GA.	BR000-0001-00(366)	300	301

TYPE 1

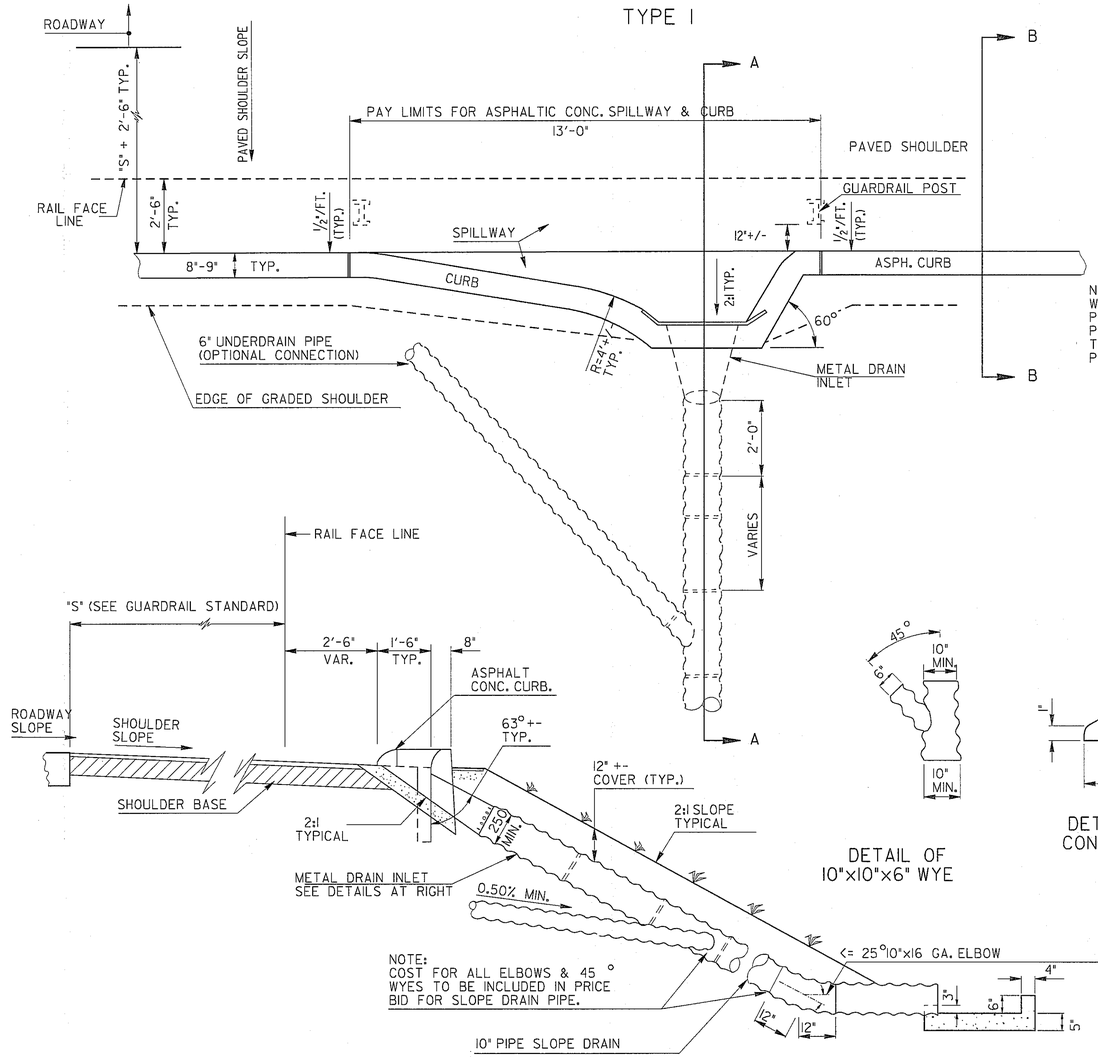

SPECIAL NOTE:
GENERAL USE OF THESE DETAILS WILL BE WHERE FILL EMBANKMENT WARRANTS GUARDRAIL AND PAVED SHOULDER WILL BE ADJACENT TO THE ROADWAY. OMIT ON HIGH SIDE OF S.E.

NOTE:
WHEN THE 10"x10"x6" 45 WYE IS A REQUIRED PART OF STAGE 1 CONSTRUCTION, A TEMPORARY PLUG WILL BE REQUIRED FOR THE 6" BRANCH OF THE WYE UNTIL THE CONNECTION OF THE PERFORATED PIPE IS MADE ON STAGE 2 CONSTRUCTION. SEE SECTION 577

TYPE 2

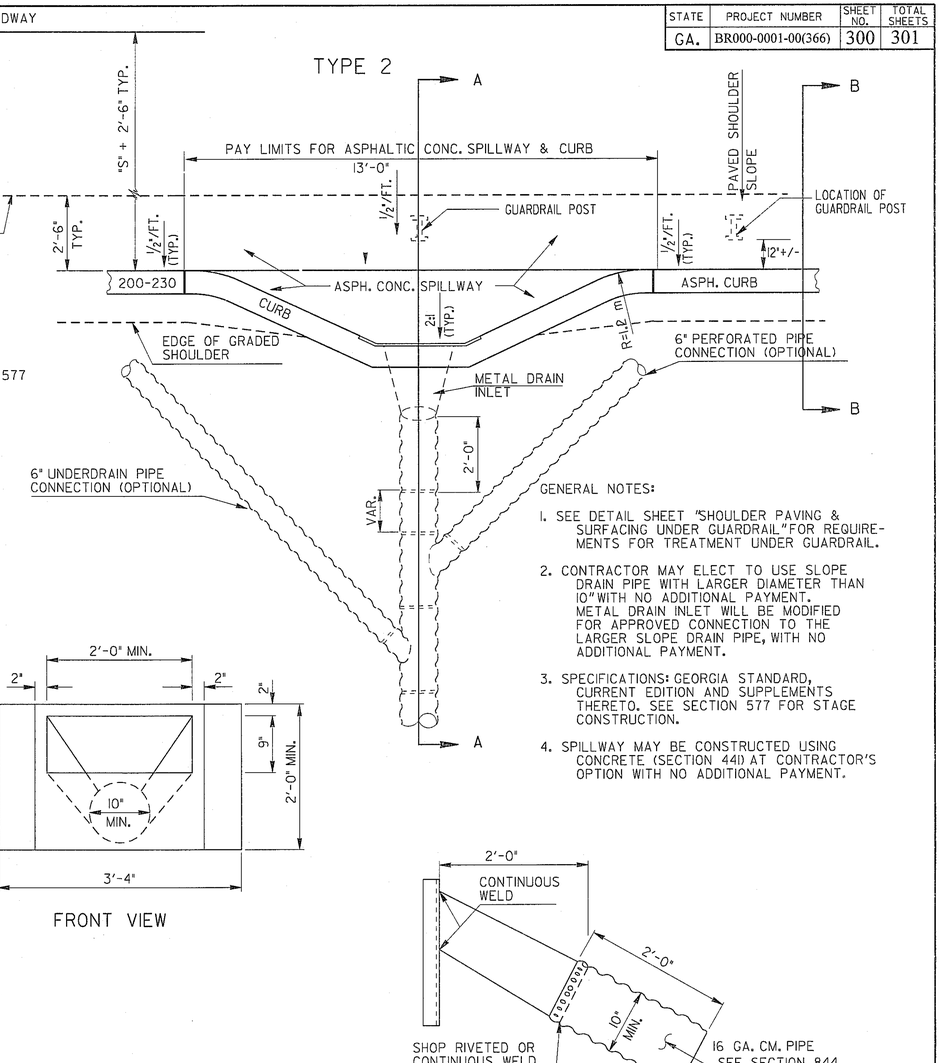

GENERAL NOTES:

1. SEE DETAIL SHEET "SHOULDER PAVING & SURFACING UNDER GUARDRAIL" FOR REQUIREMENTS FOR TREATMENT UNDER GUARDRAIL.
2. CONTRACTOR MAY ELECT TO USE SLOPE DRAIN PIPE WITH LARGER DIAMETER THAN 10" WITH NO ADDITIONAL PAYMENT. METAL DRAIN INLET WILL BE MODIFIED FOR APPROVED CONNECTION TO THE LARGER SLOPE DRAIN PIPE, WITH NO ADDITIONAL PAYMENT.
3. SPECIFICATIONS: GEORGIA STANDARD, CURRENT EDITION AND SUPPLEMENTS THERETO. SEE SECTION 577 FOR STAGE CONSTRUCTION.
4. SPILLWAY MAY BE CONSTRUCTED USING CONCRETE (SECTION 441) AT CONTRACTOR'S OPTION WITH NO ADDITIONAL PAYMENT.

SECTION A-A

DETAIL OF 10"x10"x6" WYE

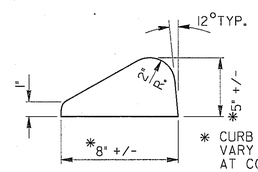

* CURB DIMENSIONS MAY VARY WITHIN THESE LIMITS AT CONTRACTOR'S OPTION.

DETAIL OF ASPHALTIC CONCRETE CURB (TYP.)

FRONT VIEW

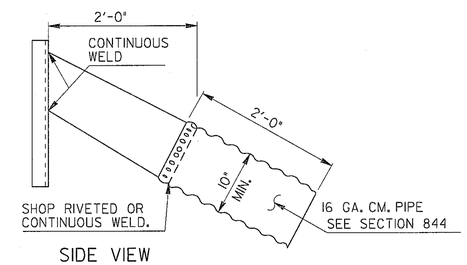

SIDE VIEW

DETAILS OF METAL DRAIN INLET

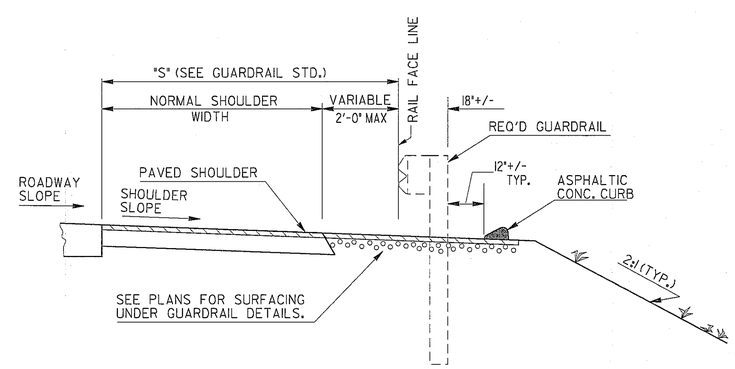

SECTION B-B

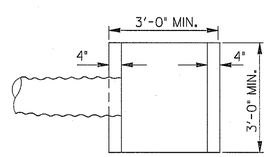

PLAN

OUTLET APRON

APRON QUANTITY:

0.17 CU. YDS. CL. "B" CONCRETE OR CL. "A" CONCRETE

ALTERNATE:
APRON MAY BE CONSTRUCTED TO APPROXIMATELY THE SAME MIN. DIMENSIONS FROM SAND CEMENT BAG RIP RAP, STONE GROUT RIP RAP, OR MORTAR RUBBLE MASONRY WITH NO CHANGE IN PAYMENT.

NOTE:
OMIT APRON WHERE PIPE IS TERMINATED IN PAVED DITCH.

SECTION

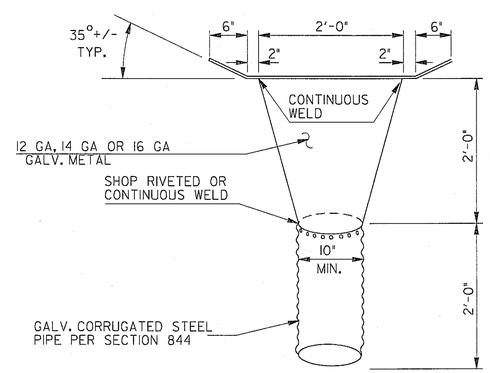

TOP VIEW

NOTE: DIMENSIONS ARE SUBJECT TO MANUFACTURERS TOLERANCES.

NOTE:
SEE SECTION 577 FOR METAL DRAIN INLET, STAGE CONSTRUCTION

REVISION	DATE	BY
GENERAL REVISIONS	4-28-99	GJP
GENERAL REVISIONS	03-22-99	RMJ
GENERAL REVISIONS	12-19-96	

DEPARTMENT OF TRANSPORTATION
STATE OF GEORGIA

CONSTRUCTION DETAIL

ASPHALTIC CONCRETE SPILLWAY WITH METAL DRAIN INLET ASPHALTIC CONCRETE CURB

NO SCALE — DEC. 1995

DES. ____ DRW. ____ TRA. ____ CHK. ____

(SUBMITTED) STATE ROAD & AIRPORT DESIGN ENGR.

(APPROVED) CHIEF ENGINEER

NUMBER D-26