STATE	PROJECT NUMBER	SHEET NO.	TOTAL SHEETS
GA.	BR000-0001-00(366)	198	301

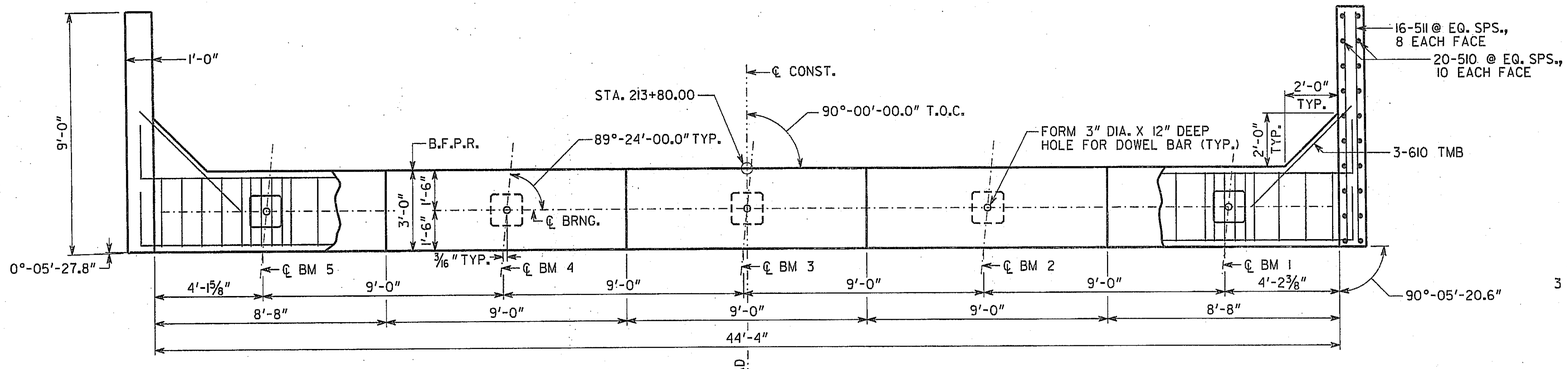

PLAN

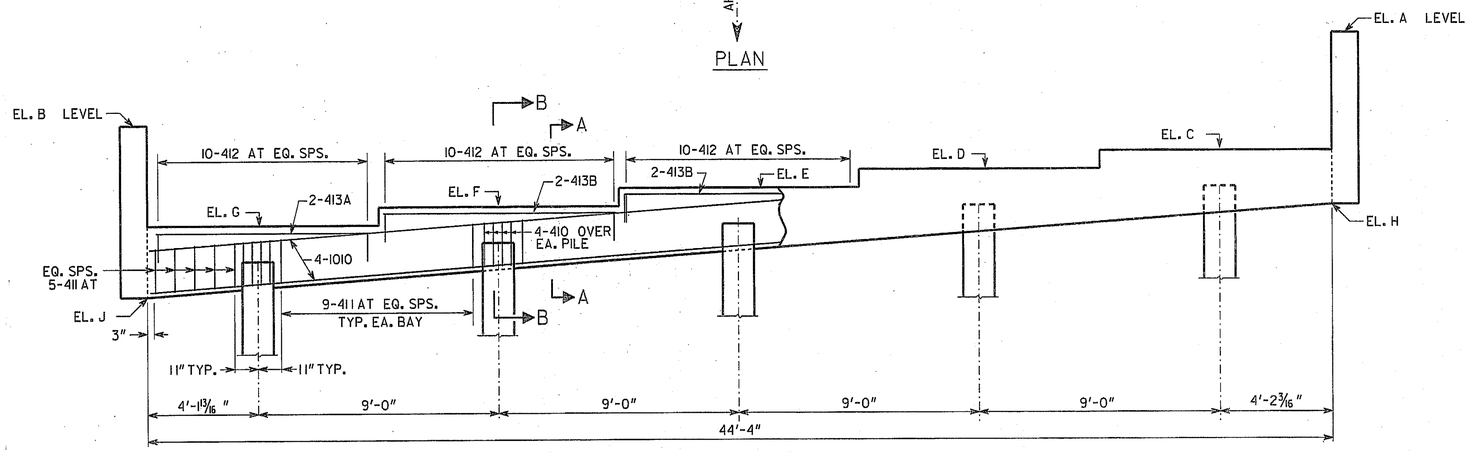

ELEVATION
BENT 1
(LOOKING BACK)

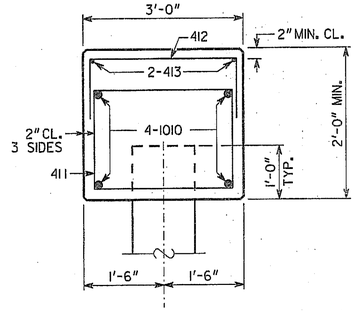

SECTION A-A

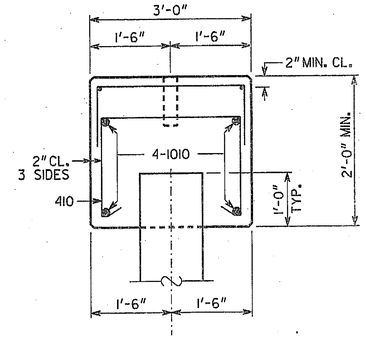

SECTION B-B

SUBSTRUCTURE QUANTITIES		
ITEM	BENT 1	BENT 4
CU YD CLASS "A" CONCRETE	15.9	16.0
LB BAR REINFORCEMENT STEEL	2021	2021

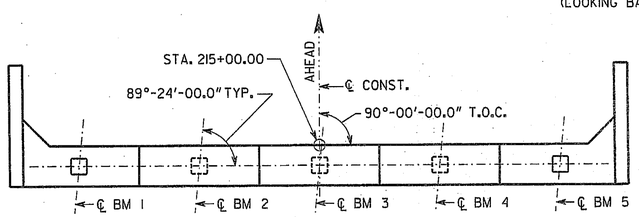

PLAN

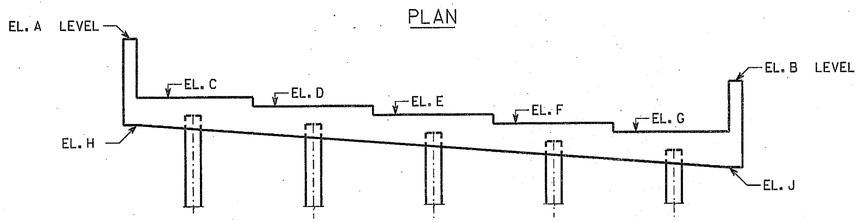

ELEVATION
BENT 4
(LOOKING AHEAD)

NOTES:

POUR WINGWALLS MONOLITHICALLY WITH CAP.

MAINTAIN 2" CL. ON ALL REINFORCEMENT UNLESS OTHERWISE NOTED.

BOTTOM OF WINGWALLS ARE LEVEL.

SEE GA. STD. 9037 FOR DRAINAGE DETAILS AT END BENTS.

ALL PILES SHALL BE 14 IN. SQ. PSC

PLAN DRIVING OBJECTIVE

ALL PILES SHALL BE DRIVEN TO A DRIVING RESISTANCE OF 60 TONS AFTER A MINIMUM TIP ELEVATION OF 80 IS ACHIEVED.

TABLE OF ELEVATIONS									
	A	B	C	D	E	F	G	H	J
BENT 1	135.14	132.64	131.56	130.88	130.20	129.52	128.84	129.54	126.18
BENT 4	136.09	132.75	131.67	130.99	130.31	129.64	128.96	129.64	126.31

BRIDGE NO. 3

GEORGIA
DEPARTMENT OF TRANSPORTATION
PRECONSTRUCTION DIVISION-OFFICE OF BRIDGE DESIGN

END BENT DETAILS
S.R. 30 (U.S. 280) OVER THE OCONEE RIVER OVERFLOW
WHEELER-MONTGOMERY COUNTY
BR000-0001-00(366)

SCALE: 3/8" = 1'-0" (UNLESS NOTED)
JUNE 2010

DRAWING NO. 35-48
BRIDGE SHEET 8 OF 11

REVISIONS
DATE
BY

DESIGNED LEL
DRAWN LEL
CHECKED DDF
DESIGN GROUP SWW
REVIEWED WMD
APPROVED PVL

W0001366B3.DGN

35-048