STATE	PROJECT NUMBER	SHEET NO.	TOTAL SHEETS
GA.	BR000-0001-00(366)	197	301

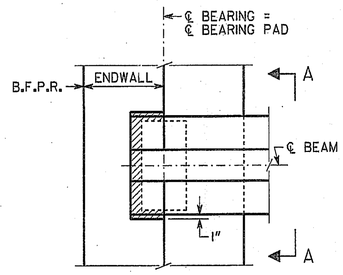

PLAN
BENT 1 SHOWN
BENT 4 SIMILAR

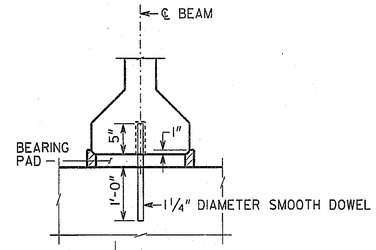

PREFORMED FOAM JOINT FILLER SHALL BE FURNISHED IN ACCORDANCE WITH SUB-SECTION 833.2.10 OF THE GEORGIA DOT SPECIFICATIONS.

ENDWALL NOT SHOWN

SECTION A-A

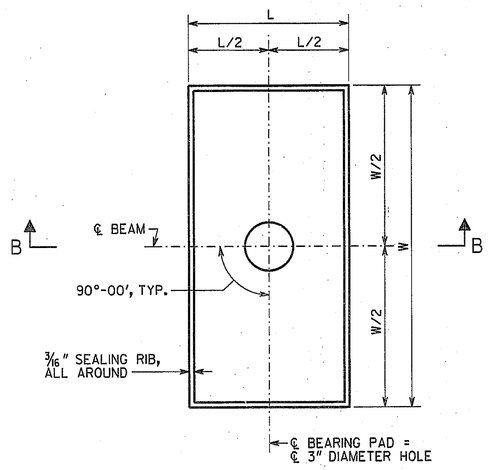

PLAN

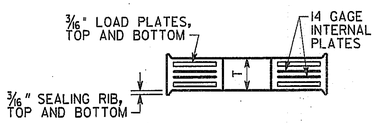

SECTION B-B

BEARING PAD

NOTES

1) BEARING PADS HAVE BEEN DESIGNED ACCORDING TO AASHTO SPECIFICATIONS DIVISION I, SECTION 14.6.6 AND SHALL BE FURNISHED IN ACCORDANCE WITH AASHTO SPECIFICATIONS DIVISION II, SECTION 18, BEARINGS.

2) 1 1/4" DIAMETER SMOOTH DOWELS SHALL BE ASTM A 709 GRADE 36.

3) BEARING PADS SHALL BE MADE OF 60 DUROMETER HARDNESS NEOPRENE, GRADE 2 OR HIGHER.

4) 3" DIAMETER HOLE IN BEARING PADS MAY BE FORMED OR DRILLED.

5) BEARING PADS SHALL HAVE 1/4" COVER ON THE TOP, BOTTOM, AND SIDES AND AROUND THE HOLE.

6) 3/16" LOAD PLATES AND 14 GAGE INTERNAL PLATE(S) (IF REQUIRED) SHALL BE ASTM A 709 GRADE 36 OR ASTM A 1011 GRADE 36.

7) NUMBER OF INTERNAL PLATES SHOWN FOR ILLUSTRATION PURPOSES ONLY. THE NUMBER OF INTERNAL PLATE(S) SPECIFIED SHALL BE EQUALLY SPACED BETWEEN LOAD PLATES.

8) USE OF 1 1/2° MOLD DRAFT IS OPTIONAL.

BENT	BEARING PADS							
						DESIGN LOADS (KIPS)		
	W	L	T	NUMBER OF INTERNAL PLATE(S)	DESIGN SHEAR DEFLECTION	DEAD LOAD	LIVE LOAD (NO IMPACT)	DEAD LOAD + LIVE LOAD
1	16"	10"	1 1/2"	2	1/4"	50.1	43.9	94.0
2	16"	10"	1 1/2"	2	1/8"	33.7	44.1	77.8
3	16"	10"	1 1/2"	2	0	33.7	44.1	77.8
4	16"	10"	1 1/2"	2	1/8"	50.1	43.9	94.0

BRIDGE NO. 3

GEORGIA
DEPARTMENT OF TRANSPORTATION
PRECONSTRUCTION DIVISION-OFFICE OF BRIDGE DESIGN

BEARING DETAILS
S.R.30 (U.S.280) OVER THE OCONEE RIVER OVERFLOW

WHEELER-MONTGOMERY COUNTIES — BR000-0001-00(366)

NO SCALE — JUNE 2010

DRAWING NO. 35-47

BRIDGE SHEET 7 OF 11

REVISIONS — DATE — BY

DESIGNED LEL — DRAWN LEL — CHECKED DDF — DESIGN GROUP SWW — REVIEWED WMD — APPROVED PVL

W000136683.DGN

REVISED DECEMBER 15, 2000

BEARING.DGN

35-047