STATE	PROJECT NUMBER	SHEET NO.	TOTAL SHEETS
GA.	BR000-0001-00(366)	183	301

DIMENSION "D" IS MEASURED FROM TOP OF SLAB TO TOP OF BEAMS AT CENTERLINE BEARING. VARY "D" BETWEEN BEARINGS TO COMPENSATE FOR DEAD LOAD DEFLECTION. MAINTAIN A CONSTANT SLAB THICKNESS OF 7⅞".
"D" = 9¼"

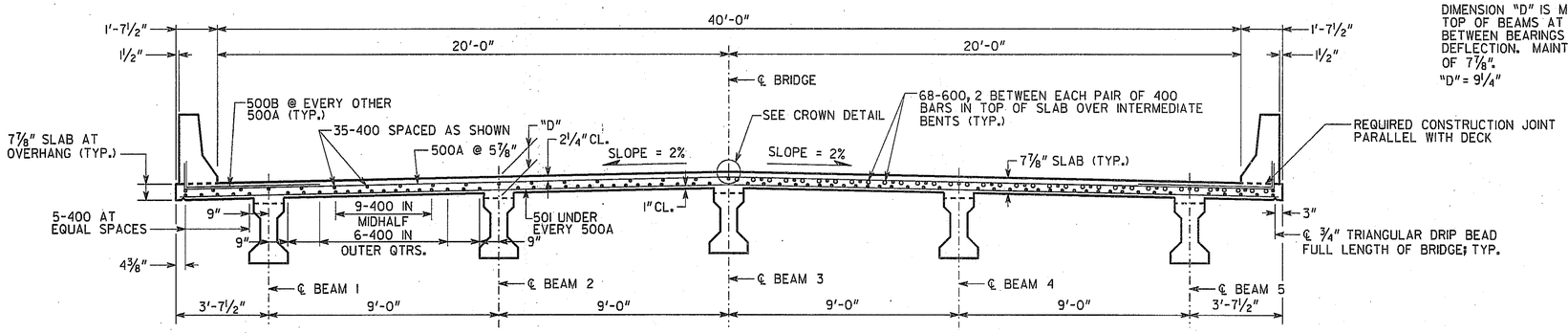

HALF SECTION THRU SLAB
(LOOKING AHEAD)

HALF SECTION THRU SLAB AT INTERMEDIATE BENT
(LOOKING AHEAD)

* TAPERS TO 0" AT END POST.

** AT CONTRACTOR'S OPTION, BENT 1 & 9 REPLACE 10" RADIUS WITH STRAIGHT INTERSECTING SLOPES.

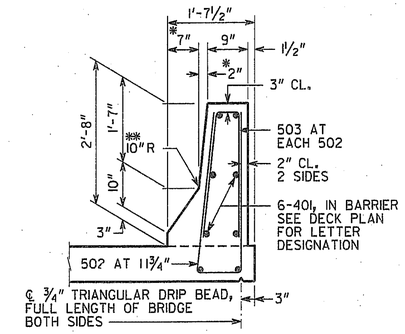

BARRIER DETAIL

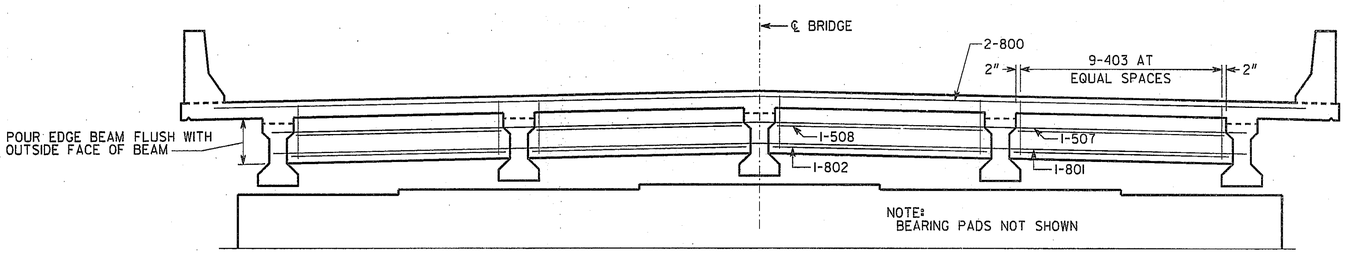

SECTION THRU EDGE BEAM
(LOOKING AHEAD)

※ SEAL AS PER GEORGIA DOT SPECIFICATIONS SECTION 449.2.D. SEAL SHALL BE 2" (H) BY 1⅝" WIDE PRIOR TO INSTALLATION.

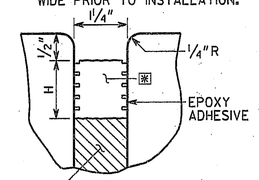

FILLER MATERIAL IN ACCORDANCE WITH SUB-SECTION 833.2.01 OF THE GEORGIA DOT SPECIFICATIONS, HOLD IN PLACE WITH 10d GALV. NAILS

LONGITUDINAL SECTION

EXPANSION JOINT DETAILS
END BENTS

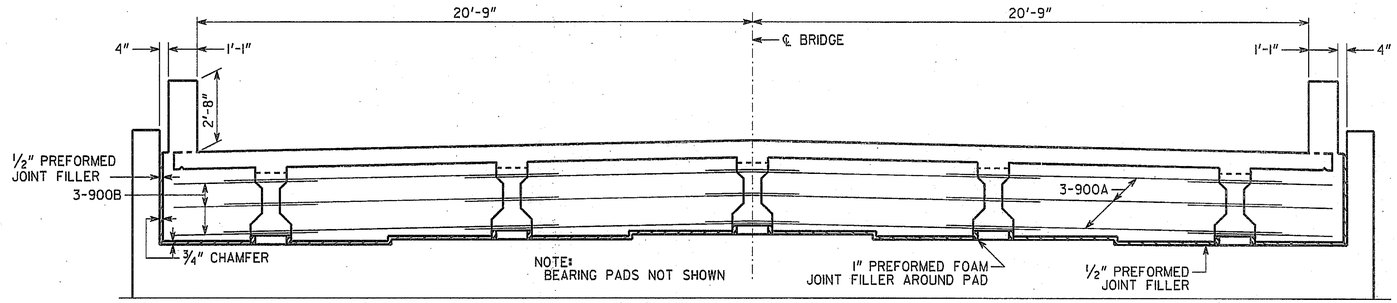

SECTION THRU ENDWALL
(LOOKING AHEAD)

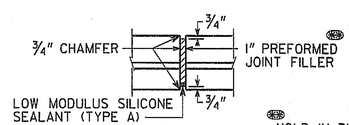

PLAN

HOLD IN PLACE WITH 10d GALV. NAILS.

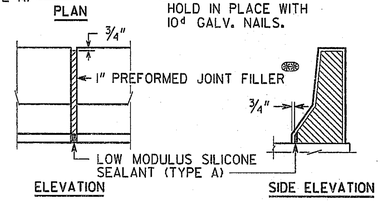

ELEVATION

SIDE ELEVATION

DETAILS OF 1" EXPANSION JOINT IN BARRIER

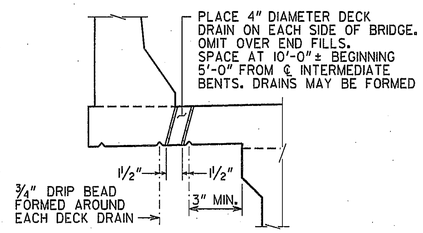

DECK DRAIN DETAIL

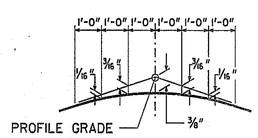

CROWN DETAIL
2% CROSS SLOPE

BRIDGE NO. 2

GEORGIA
DEPARTMENT OF TRANSPORTATION
PRECONSTRUCTION DIVISION-OFFICE OF BRIDGE DESIGN

SUPERSTRUCTURE DETAILS
S.R. 30 (U.S. 280) OVER THE OCONEE RIVER OVERFLOW
WHEELER-MONTGOMERY COUNTIES
BR000-0001-00(366)

SCALE: ⅜" = 1'-0" (UNLESS NOTED) JULY 2009

DRAWING NO. 35-33
BRIDGE SHEET 4 OF 11

DATE	REVISIONS	BY

DESIGNED LEL | CHECKED DDF | REVIEWED WMD
DRAWN WMC | DESIGN GROUP SWW | APPROVED PVL

FILENAME: W0001366B2.DGN

35-033