STATE	PROJECT NUMBER	SHEET NO.	TOTAL SHEETS
GA.	BR000-0001-00(366)	172	301

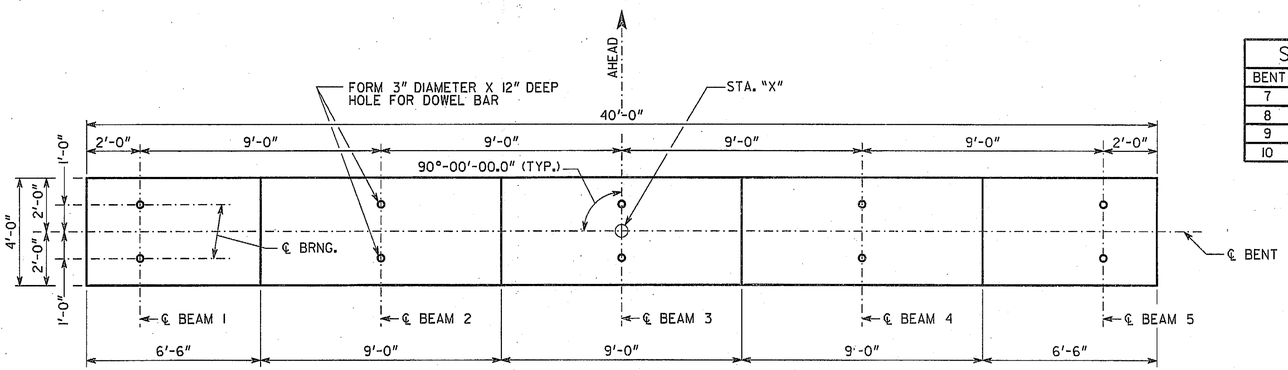

PLAN

STA. "X"	
BENT	STA.
7	172+68.00
8	173+88.00
9	175+08.00
10	176+28.00

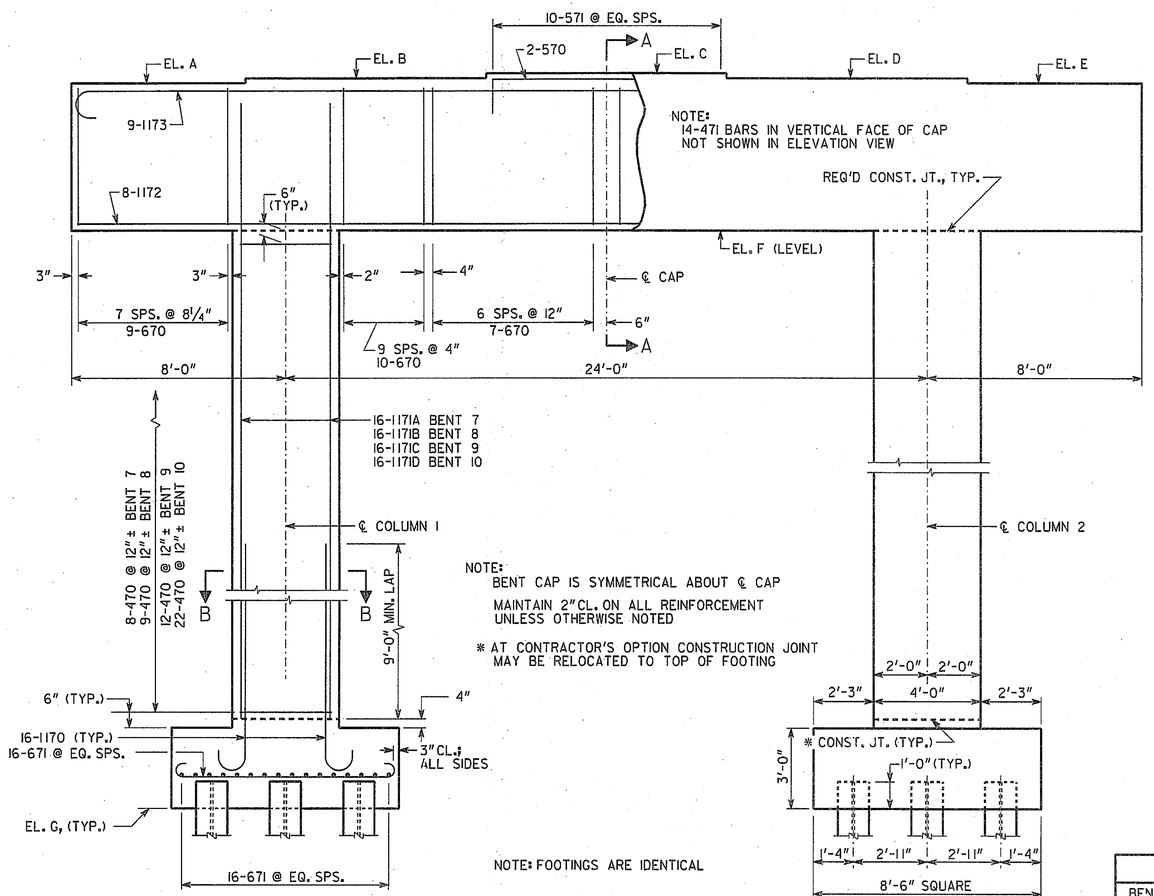

NOTE:
BENT CAP IS SYMMETRICAL ABOUT ℄ CAP

MAINTAIN 2" CL. ON ALL REINFORCEMENT UNLESS OTHERWISE NOTED

* AT CONTRACTOR'S OPTION CONSTRUCTION JOINT MAY BE RELOCATED TO TOP OF FOOTING

NOTE: FOOTINGS ARE IDENTICAL

ELEVATION
BENT 4 SHOWN
(LOOKING AHEAD)

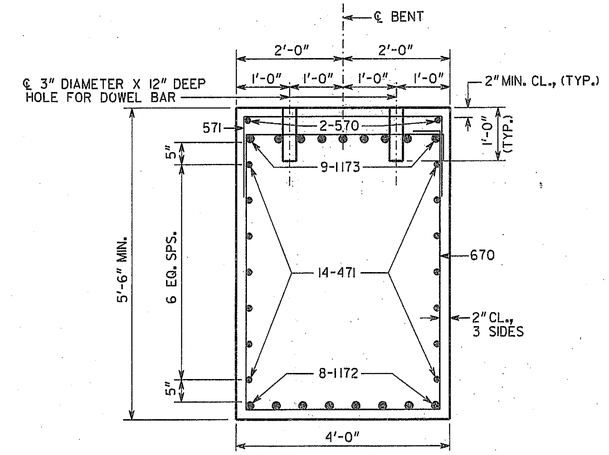

SECTION A-A
SCALE: ¾" = 1'-0"

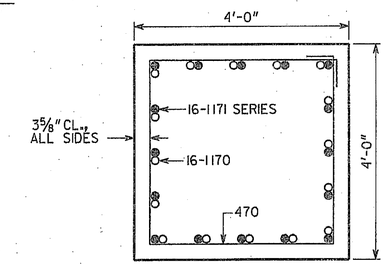

NOTE: DO NOT PLACE 1170 BARS IN CORNERS OF COLUMNS.

SECTION B-B
SCALE: ¾" = 1'-0"

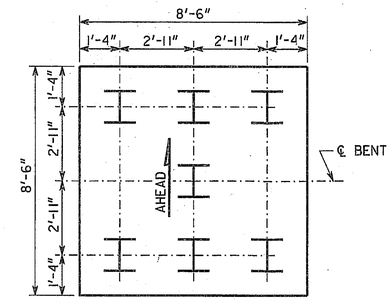

PILE LAYOUT

SUBSTRUCTURE QUANTITIES				
ITEM	BENT 7	BENT 8	BENT 9	BENT 10
CU YD CLASS "AA" CONCRETE	58.8	60.3	63.6	74.9
LB BAR REINFORCEMENT STEEL	10905	11137	11676	13483

ALL PILES SHALL BE STEEL H, HP 14 X 73

PLAN DRIVING OBJECTIVE

ALL PILES SHALL BE DRIVEN TO A DRIVING RESISTANCE OF 96 TONS AFTER A MINIMUM TIP ELEVATION OF 85 IS ACHIEVED.

TABLE OF LETTERED ELEVATIONS							
BENT	A	B	C	D	E	F	G
7	128.35	128.53	128.68	128.53	128.35	122.85	112.00
8	128.39	128.57	128.72	128.57	128.39	122.89	110.75
9	128.41	128.59	128.74	128.59	128.41	122.91	108.00
10	128.42	128.60	128.74	128.60	128.42	122.92	98.50

BRIDGE NO. 1

GEORGIA
DEPARTMENT OF TRANSPORTATION
PRECONSTRUCTION DIVISION-OFFICE OF BRIDGE DESIGN

SUBSTRUCTURE DETAILS (BENTS 7 THRU 10)
S.R. 30 (U.S. 280) OVER OCONEE RIVER
WHEELER-MONTGOMERY COUNTIES
BR000-0001-00(366)

SCALE: ⅜" = 1'-0" (UNLESS NOTED) JUNE 2010

DRAWING NO. 35-22
BRIDGE SHEET 22 OF 29

REVISIONS | DATE | BY

DESIGNED SWW | CHECKED DLC | REVIEWED WMD/WEI
DRAWN WMC | DESIGN GROUP SWW | APPROVED PVL

FILENAME: W0001366B1.DGN

35-022