STATE	PROJECT NUMBER	SHEET NO.	TOTAL SHEETS
GA.	BR000-0001-00(366)	171	301

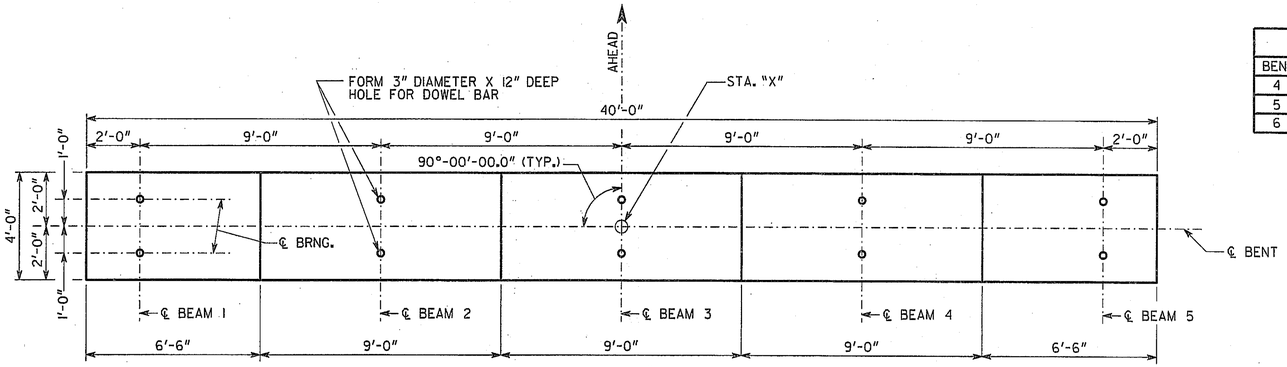

PLAN

STA. "X"	
BENT	STA.
4	168+93.00
5	170+18.00
6	171+43.00

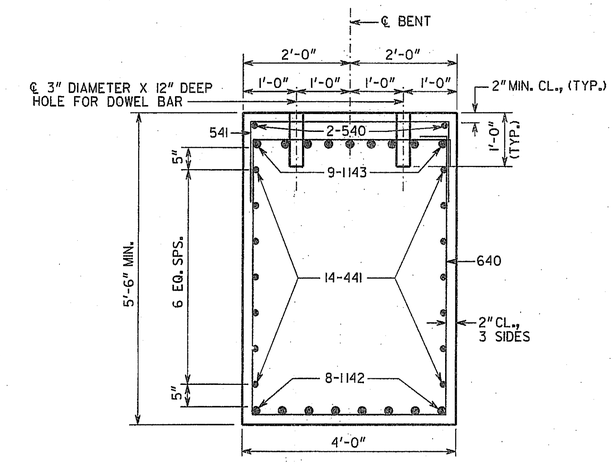

SECTION A-A

SCALE: 3/4" = 1'-0"

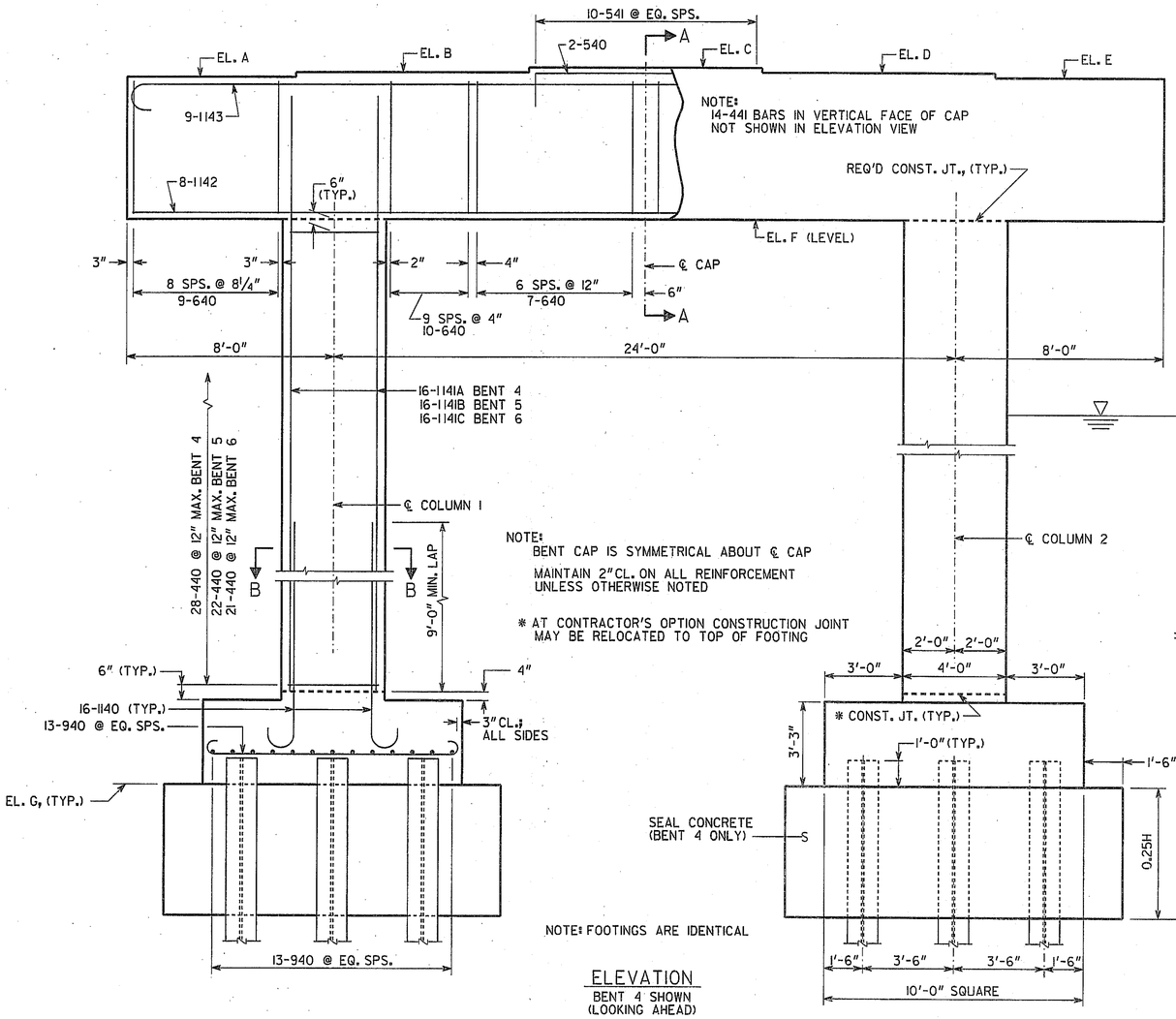

NOTE:
BENT CAP IS SYMMETRICAL ABOUT ℄ CAP

MAINTAIN 2" CL. ON ALL REINFORCEMENT UNLESS OTHERWISE NOTED

* AT CONTRACTOR'S OPTION CONSTRUCTION JOINT MAY BE RELOCATED TO TOP OF FOOTING

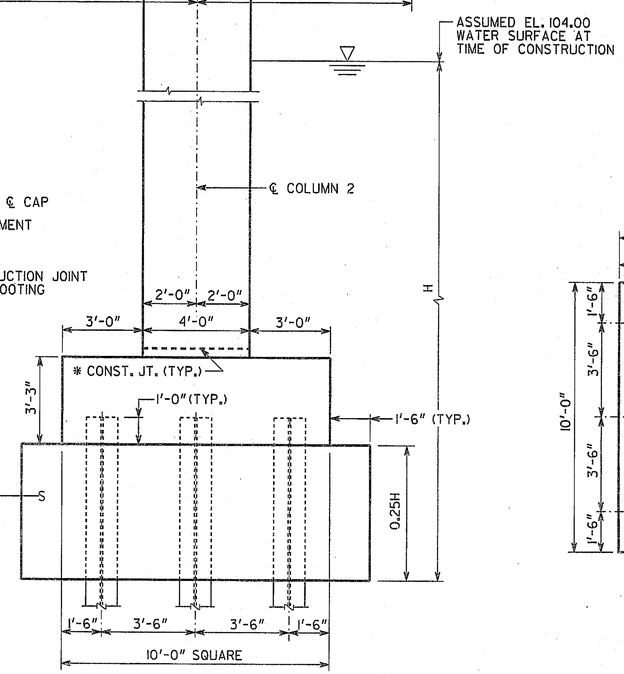

NOTE: FOOTINGS ARE IDENTICAL

ELEVATION

BENT 4 SHOWN (LOOKING AHEAD)

TABLE OF LETTERED ELEVATIONS							
BENT	A	B	C	D	E	F	G
4	128.25	128.43	128.58	128.43	128.25	122.75	92.00
5	128.28	128.46	128.61	128.46	128.28	122.78	97.75
6	128.31	128.49	128.64	128.49	128.31	122.81	98.75

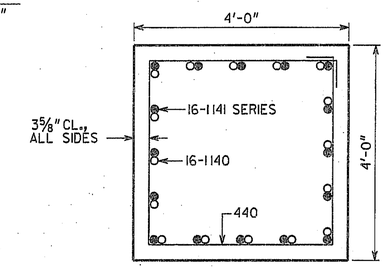

NOTE: DO NOT PLACE 1140 BARS IN CORNERS OF COLUMNS.

SECTION B-B

SCALE: 3/4" = 1'-0"

SUBSTRUCTURE QUANTITIES			
ITEM	BENT 4	BENT 5	BENT 6
CU YD CLASS "AA" CONCRETE	90.1	83.3	82.2
LB BAR REINFORCEMENT STEEL	15899	14806	16332

ALL PILES SHALL BE STEEL H, HP 14 X 73

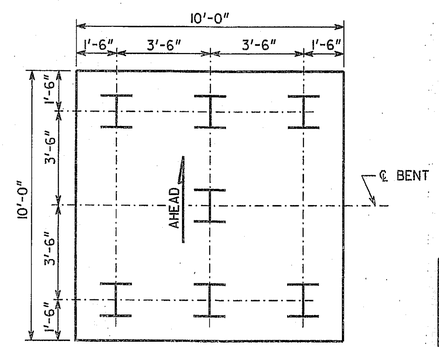

PILE LAYOUT

PLAN DRIVING OBJECTIVE

ALL PILES SHALL BE DRIVEN TO A DRIVING RESISTANCE OF 96 TONS AFTER THE FOLLOWING MINIMUM TIP ELEVATIONS ARE ACHIEVED:
BENT 4 & 5 - EL. 63.0
BENT 6 - EL. 65.0

BRIDGE NO. 1

GEORGIA
DEPARTMENT OF TRANSPORTATION
PRECONSTRUCTION DIVISION-OFFICE OF BRIDGE DESIGN

SUBSTRUCTURE DETAILS (BENTS 4 THRU 6)

S.R. 30 (U.S. 280) OVER OCONEE RIVER

WHEELER-MONTGOMERY COUNTIES — BR000-0001-00(366)

SCALE: 3/8" = 1'-0" (UNLESS NOTED) — JUNE 2010

DRAWING NO. 35-21

BRIDGE SHEET 21 OF 29

REVISIONS — DATE — BY

DESIGNED SWW — CHECKED DLC — REVIEWED WMD/WEI
DRAWN WMC — DESIGN GROUP SWW — APPROVED PVL

FILENAME: W000I366B1.DGN

35-021