STATE	PROJECT NUMBER	SHEET NO.	TOTAL SHEETS
GA.	BR000-0001-00(366)	168	301

POUR WINGWALLS MONOLITHICALLY WITH CAP.

MAINTAIN 2"CL. ON ALL REINFORCEMENT UNLESS OTHERWISE NOTED.

SEE GA. STD. 9037 FOR DRAINAGE DETAILS REQUIRED AT END BENTS.

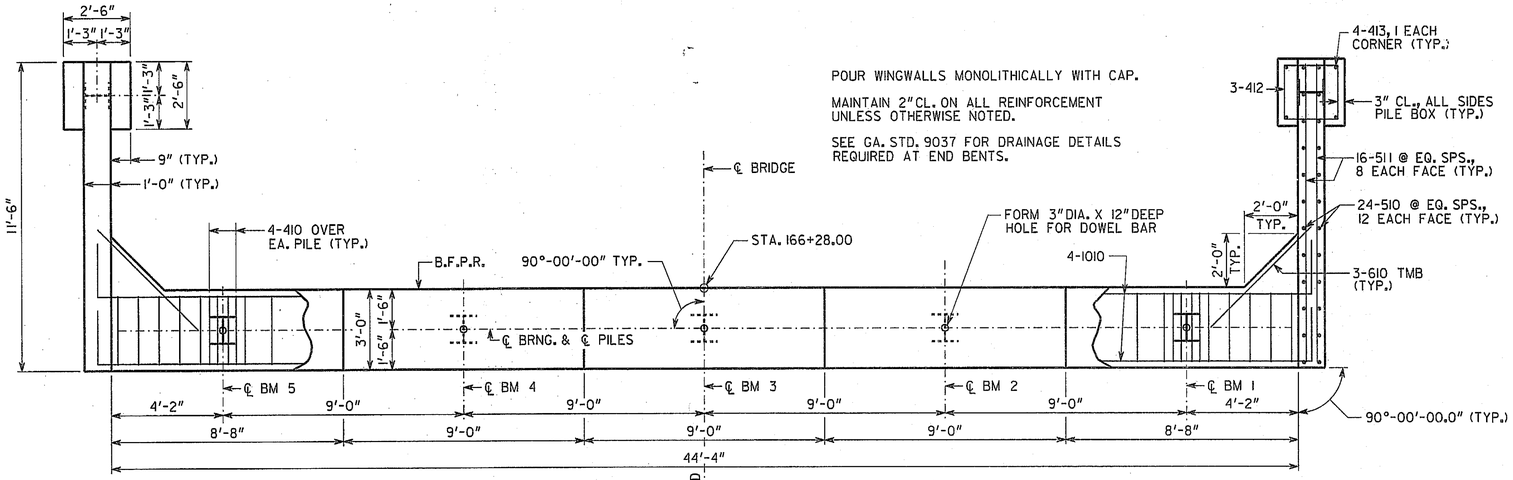

PLAN

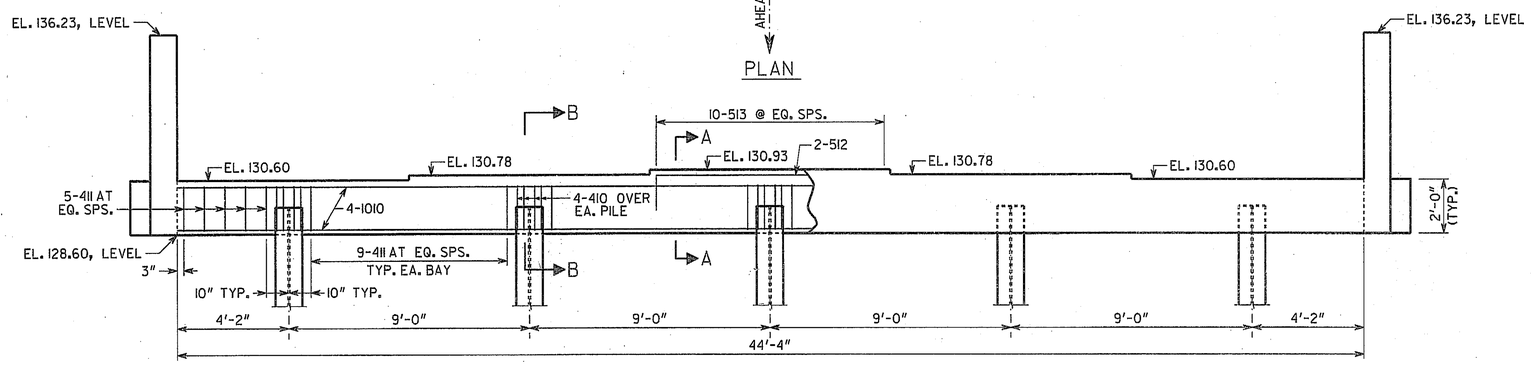

ELEVATION
BENT 1
(LOOKING BACK)

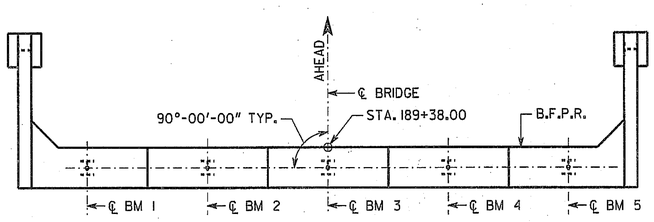

PLAN

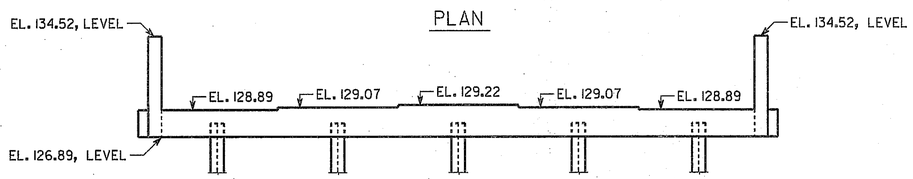

ELEVATION
BENT 28
(LOOKING AHEAD)

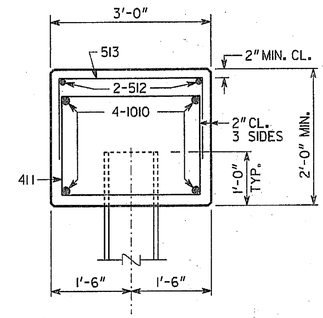

SECTION A-A
SCALE: 3/4" = 1'-0"

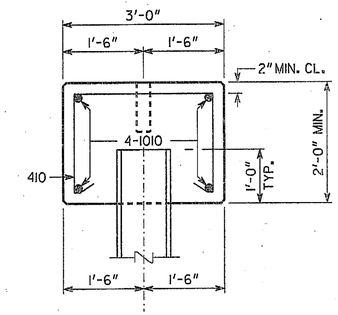

SECTION B-B
SCALE: 3/4" = 1'-0"

SUBSTRUCTURE QUANTITIES

ITEM	BENT 1	BENT 28
CU YD CLASS "AA" CONCRETE	17.8	17.8
LB BAR REINFORCEMENT STEEL	2121	2121

ALL PILES SHALL BE STEEL H, HP 12 X 53

PLAN DRIVING OBJECTIVE

ALL PILES SHALL BE DRIVEN TO A DRIVING RESISTANCE OF 70 TONS AFTER THE FOLLOWING MINIMUM TIP ELEVATIONS ARE ACHIEVED:
BENT 1, EL. 95.0
BENT 28, EL. 105.0

BRIDGE NO. 1

GEORGIA
DEPARTMENT OF TRANSPORTATION
PRECONSTRUCTION DIVISION-OFFICE OF BRIDGE DESIGN

SUBSTRUCTURE DETAILS (BENTS 1 & 28)
S.R. 30 (U.S. 280) OVER OCONEE RIVER
WHEELER-MONTGOMERY COUNTIES BR000-0001-00(366)

SCALE: 3/8" = 1'-0" (UNLESS NOTED) JUNE 2010

DRAWING NO. 35-18
BRIDGE SHEET 18 OF 29

REVISIONS | DATE | BY

DESIGNED SWW | CHECKED DLC | REVIEWED WMD/WEI
DRAWN WMC | DESIGN GROUP SWW | APPROVED PVL

FILENAME: W0001366B1.DGN

35-018