STATE	PROJECT NUMBER	SHEET NO.	TOTAL SHEETS
GA.	BR000-0001-00(366)	162	301

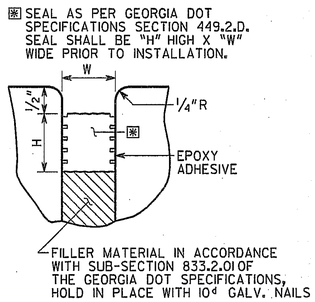

LONGITUDINAL SECTION

END BENT EXPANSION JOINT DETAILS

BENT	JT. OPENING	W	H
1	1 1/4"	1 1/4"	2"
28	1 3/4"	2 3/16"	2"

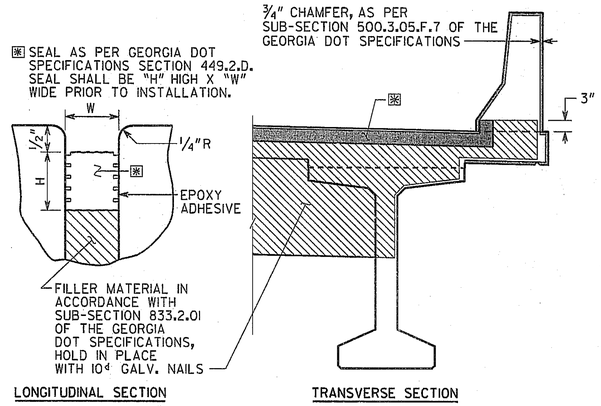

LONGITUDINAL SECTION TRANSVERSE SECTION

EXPANSION JOINT DETAILS

BENT	JOINT OPENING			JOINT SEAL	
	30°	60°	90°	W	H
5, 9	3 5/16"	2 1/4"	1 3/16"	2 13/16"	2 1/2"
14, 20	2 15/16"	2"	1 1/16"	2 1/2"	2"

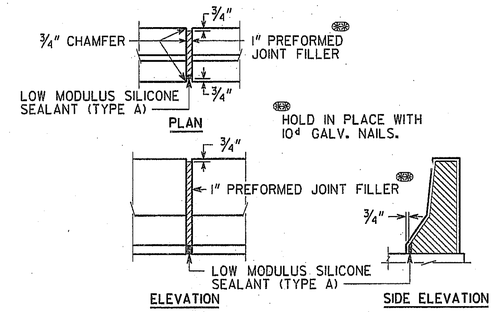

DETAILS OF 1" EXPANSION JOINT IN BARRIER

* TAPERS TO 0" AT END POST.

** AT CONTRACTOR'S OPTION, REPLACE 10" RADIUS WITH STRAIGHT INTERSECTING SLOPES.

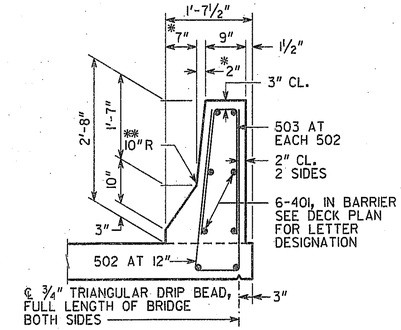

BARRIER DETAIL

BRIDGE NO. 1

GEORGIA
DEPARTMENT OF TRANSPORTATION
PRECONSTRUCTION DIVISION-OFFICE OF BRIDGE DESIGN

MISCELLANEOUS SUPERSTRUCTURE DETAILS
S.R. 30 (U.S. 280) OVER OCONEE RIVER
WHEELER-MONTGOMERY COUNTIES BR000-0001-00(366)

NO SCALE JUNE 2010

DESIGNED SWW CHECKED DLC REVIEWED WMD/WEI
DRAWN WMC DESIGN GROUP SWW APPROVED PVL

REVISIONS DATE BY

DRAWING NO. 35-12
BRIDGE SHEET 12 OF 29

FILENAME: W0001366BI.DGN

35-012