| STATE | PROJECT NUMBER | SHEET NO. | TOTAL SHEETS |
|---|---|---|---|
| GA. | BR000-0001-00(366) | 160 | 301 |

DIMENSION "D" IS MEASURED FROM TOP OF SLAB TO TOP OF BEAMS AT CENTERLINE BEARING. VARY "D" BETWEEN BEARINGS TO COMPENSATE FOR DEAD LOAD DEFLECTION. MAINTAIN A CONSTANT SLAB THICKNESS OF 7¾"
"D" = 12¼" SPANS 3 THRU 6
"D" = 12" SPANS 7 THRU 10

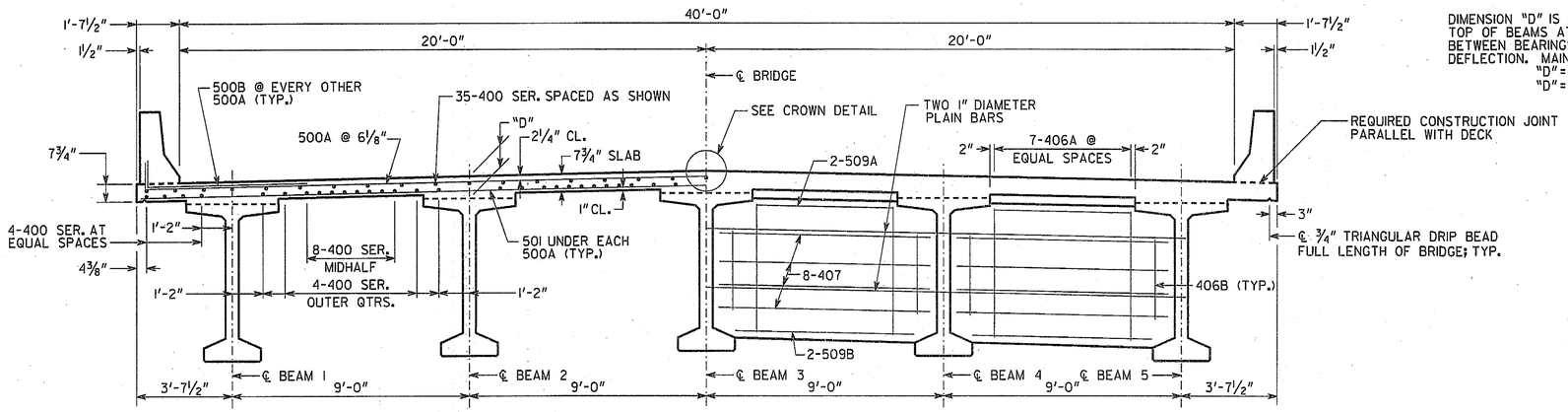


HALF SECTION THRU SLAB

HALF SECTION THRU DIAPHRAGM

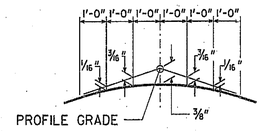


CROWN DETAIL

2% CROSS SLOPE

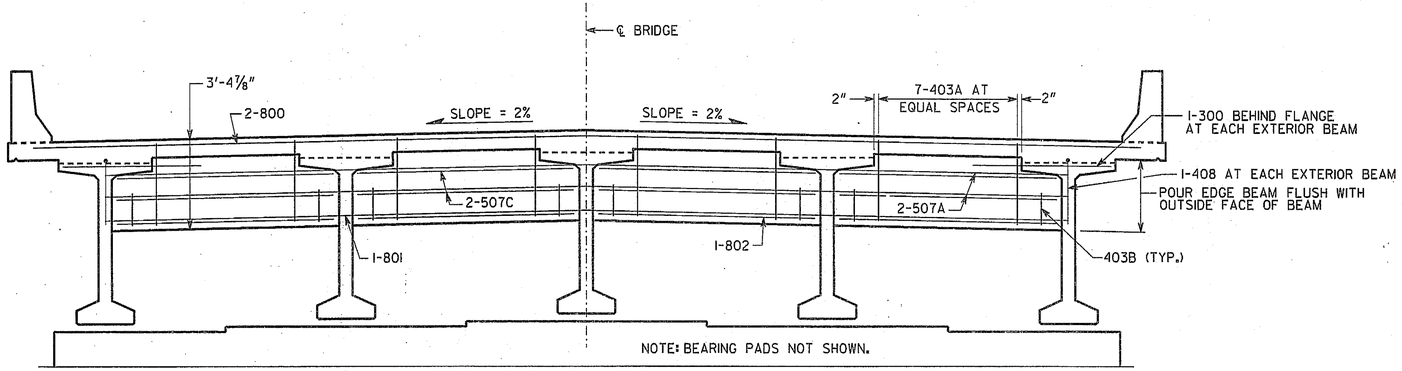


SECTION THRU EDGE BEAM

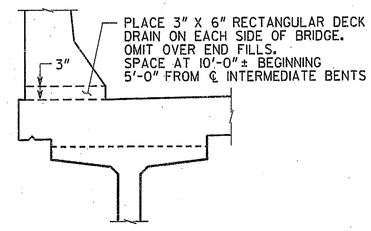


DECK DRAIN DETAIL

SCALE: ¾" = 1'-0"

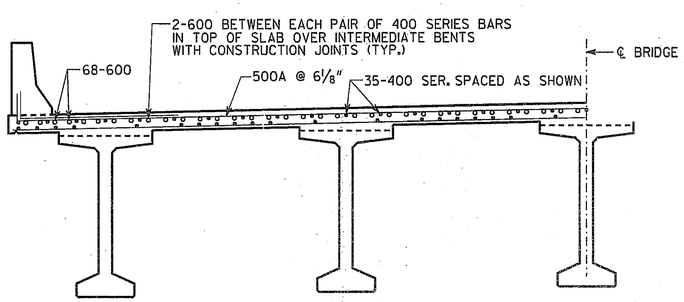


SECTION THRU SLAB AT INTERMEDIATE BENT

BRIDGE NO. 1

GEORGIA
DEPARTMENT OF TRANSPORTATION
PRECONSTRUCTION DIVISION-OFFICE OF BRIDGE DESIGN

SUPERSTRUCTURE DETAILS (SPANS 3 THRU 10)
S.R. 30 (U.S. 280) OVER OCONEE RIVER
WHEELER-MONTGOMERY COUNTIES BR000-0001-00(366)

SCALE: ⅜" = 1'-0" (UNLESS NOTED) JUNE 2010

DRAWING NO. 35-10
BRIDGE SHEET 10 OF 29

REVISIONS | DATE | BY

DESIGNED SWW | CHECKED DLC | REVIEWED WMD/WEI
DRAWN WMC | DESIGN GROUP SWW | APPROVED PVL

FILENAME: W0001366B1.DGN

35-010