REQUIRED PAVEMENT DETAIL

- Ⓐ 135 LBS PER SY/YD RECY ASPH CONC 9.5 MM SP, GP 1 OR 2 INCL BITUM MATL & H LIME
- Ⓑ 220 LBS PER SY/YD RECY ASPH CONC 19.0 MM SP, GP 1 OR 2, INCL BITUM MATL & H LIME
- Ⓒ 440 LBS PER SQ/YD RECY ASPH CONC 25.0 MM SP, GP 1 OR 2, INCL BITUM MATL & H LIME
- Ⓓ GRADED AGGREGATE BASE CRS, 12 INCH, INCL MATL
- Ⓔ RECY ASPH LEVELING, INCL BITUM MATL & H LIME (As Required)
- Ⓕ GRADED AGGREGATE BASE CRS, 6 INCH, INCL MATL
- Ⓖ GRADED AGGREGATE BASE CRS, 8 INCH, INCL MATL
- Ⓗ PVMT REINF FABRIC, TP 2, 18 INCH WIDTH

▽ PAY LIMITS FOR GRADED AGGREGATE BASE

NOTE: SEE ROADWAY PLANS FOR SUPER ELEVATION RATES AND TRANSITIONS

TYPICAL SECTION # 1

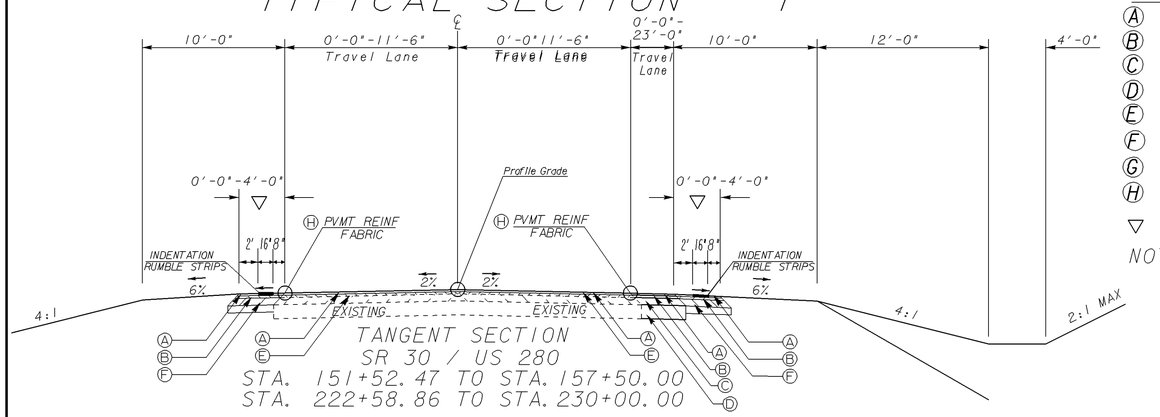

TANGENT SECTION
SR 30 / US 280
STA. 151+52.47 TO STA. 157+50.00
STA. 222+58.86 TO STA. 230+00.00

TYPICAL SECTION # 2

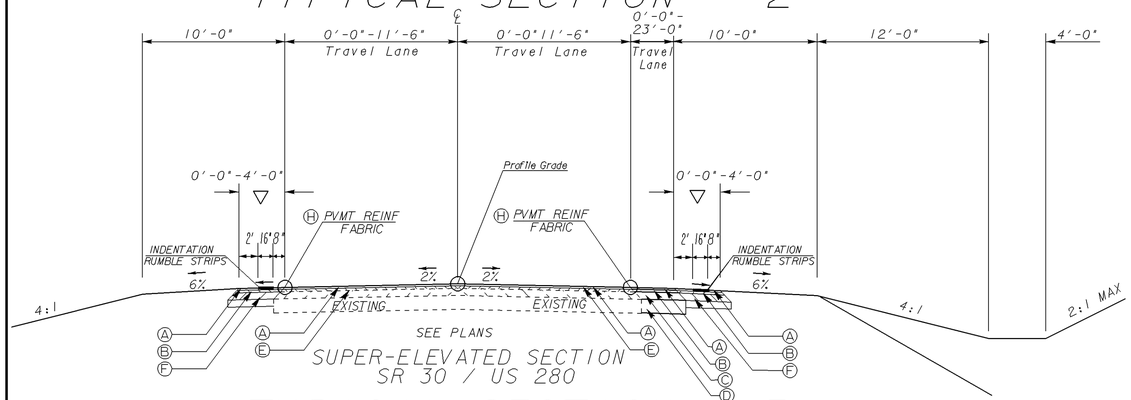

SEE PLANS
SUPER-ELEVATED SECTION
SR 30 / US 280

TYPICAL SECTION # 3

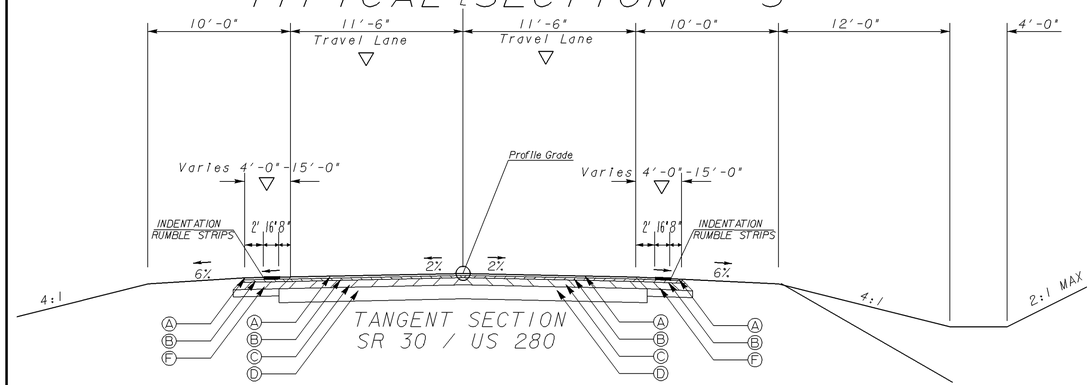

TANGENT SECTION
SR 30 / US 280

STA. 157+50.00 TO STA 222+58.86

TYPICAL SECTION # 4

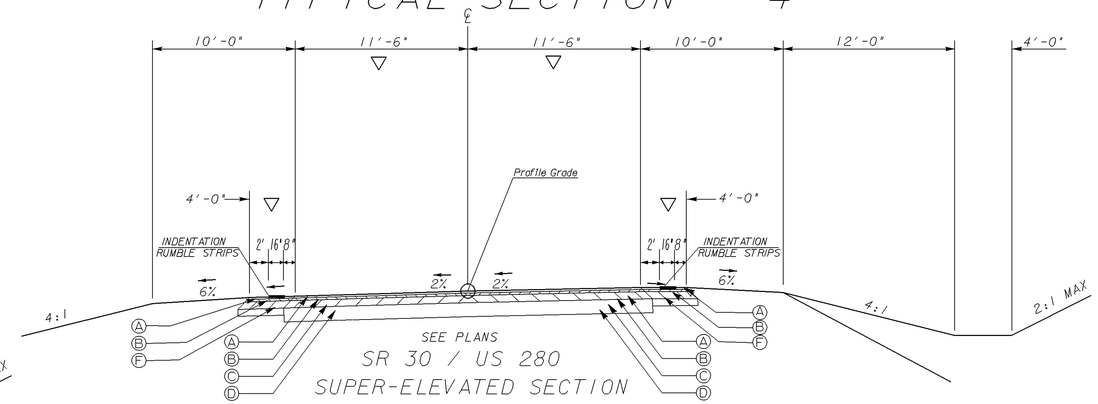

SEE PLANS
SR 30 / US 280
SUPER-ELEVATED SECTION

TYPICAL SECTION # 5

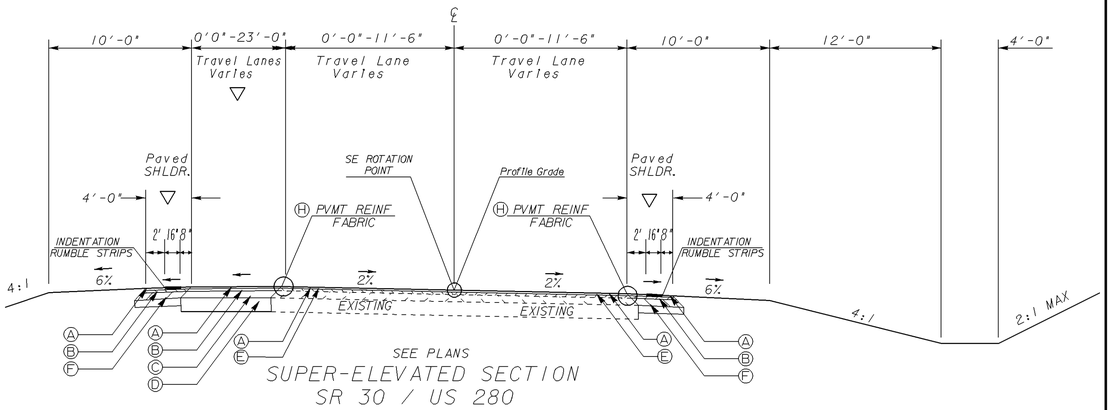

SEE PLANS
SUPER-ELEVATED SECTION
SR 30 / US 280

REVISION DATES		

GEORGIA
DEPARTMENT OF TRANSPORTATION

NOT TO SCALE

STATE OF GEORGIA
DEPARTMENT OF TRANSPORTATION
OFFICE: JESUP ROAD DESIGN

TYPICAL SECTIONS

SR 30 / US 280
WHEELER & MONTGOMERY COUNTY

DRAWING No. 05-001

1/5/2009 GPLN