STATE	PROJECT NUMBER	SHEET NO.	TOTAL SHEETS
GA.	BR000-0001-00(365)	83	152

TYPE "A"

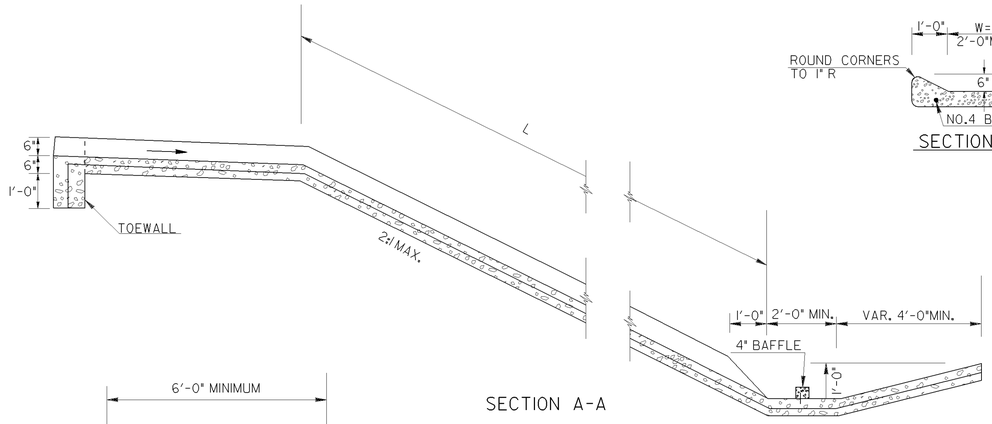

SECTION A-A

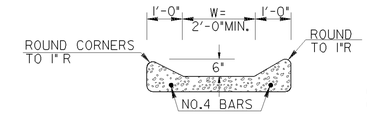

SECTION B-B

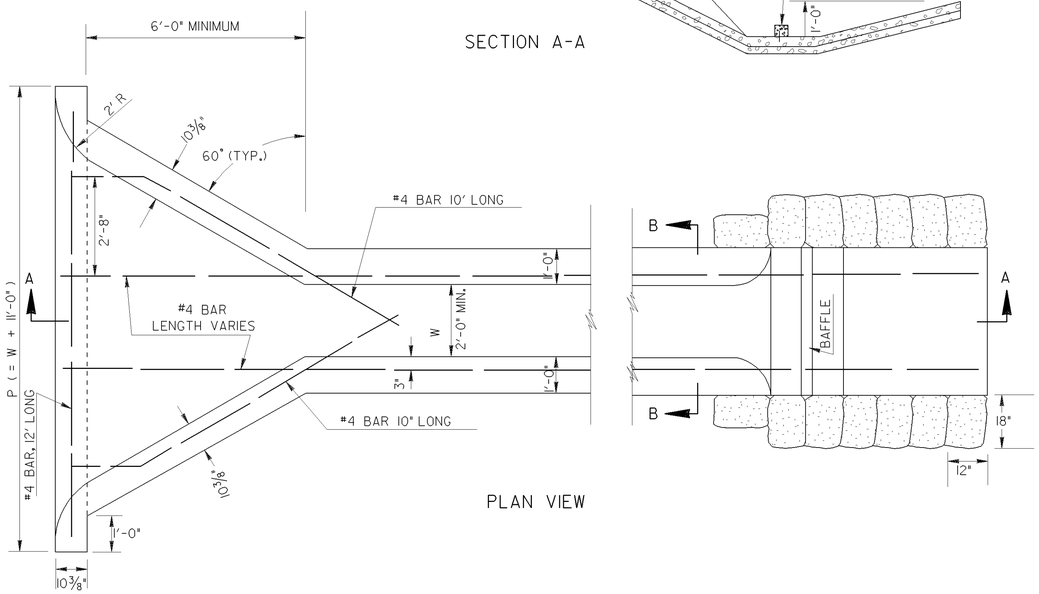

PLAN VIEW

TYPE "A" FLUME QUANTITIES

(FOR W=2'-0") CU. YDS CONCRETE=2.41+0.0926 (L)
(FOR W=4'-0") CU. YDS CONCRETE=2.59 +0.1306 (L)

(FOR EITHER W) LBS. STEEL = 41 LBS. +(1.336) (L)

SAND CEMENT BAG RIP RAP: 14 BAGS × 0.1667 SQ. YDS. /BAG = 2.333 SQ. YDS.

TYPE "B"

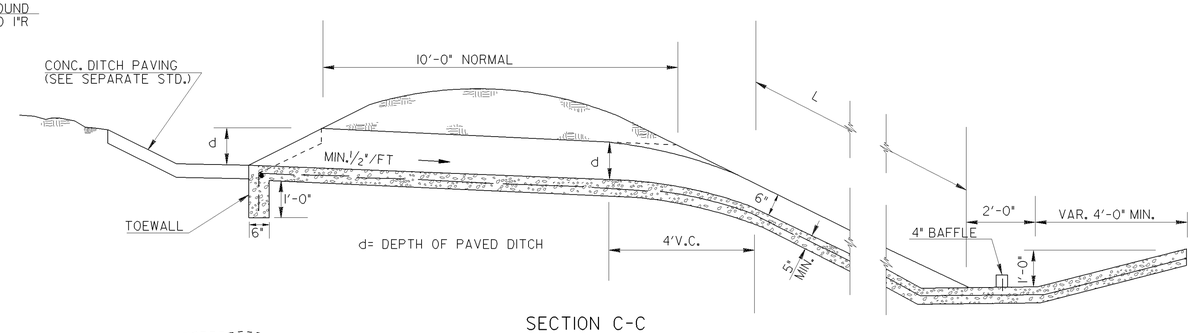

SECTION C-C

SECTION D-D

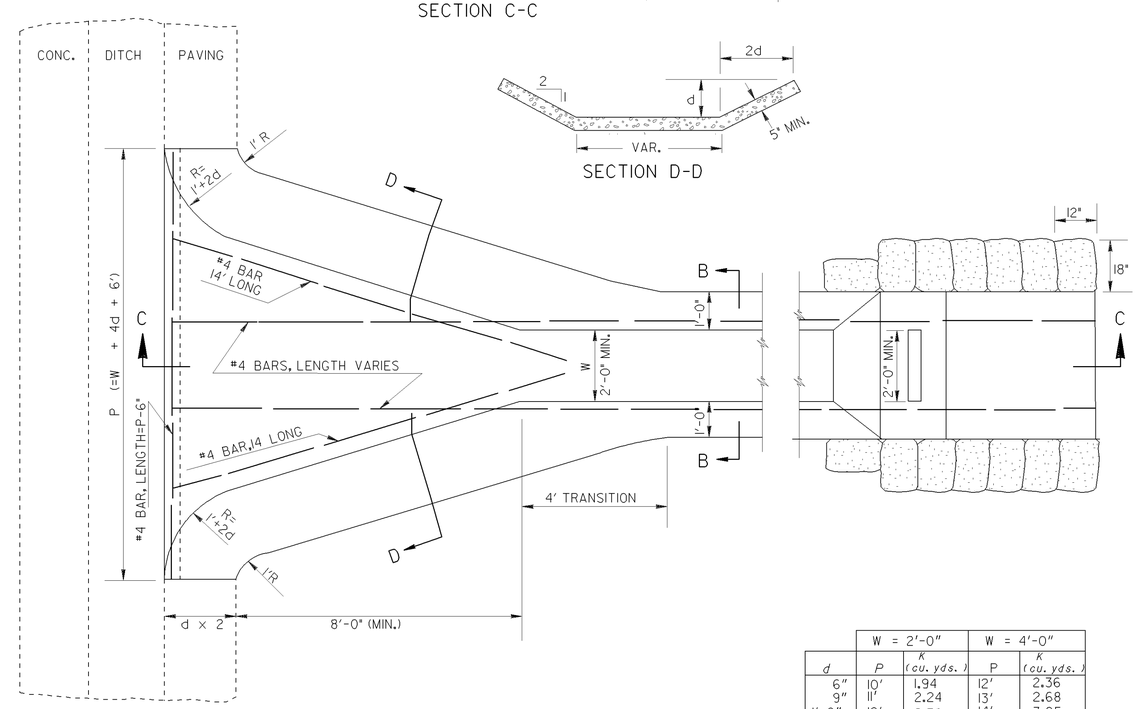

TYPE "B" FLUME QUANTITIES:

(FOR W=2'-0") CU. YDS CONC. = K + 0.0926 (L)
(FOR W=4'-0") CU. YDS CONC. = K + 0.1306 (L)

(FOR EITHER W) LBS. STEEL
= 55 + 0.667 (P)+1.336 (L)

SAND CEMENT BAG RIP RAP
14 BAGS × 0.1667 SQ. YDS/BAG = 2.333 SQ. YDS

	W = 2'-0"		W = 4'-0"	
d	P	K (cu. yds.)	P	K (cu. yds.)
6"	10'	1.94	12'	2.36
9"	11'	2.24	13'	2.68
1'-0"	12'	2.58	14'	3.05
1'-3"	13'	2.98	15'	3.43
1'-6"	14'	3.36	16'	3.84
1'-9"	15'	3.84	17'	4.32
2'-0"	16'	4.35	18'	4.86
2'-3"	17'	4.92	19'	5.45
2'-6"	18'	5.56	20'	6.10

NOTE: P=FLUME OPENING
K=CONCRETE CONSTANT(SEE FORMULAS)

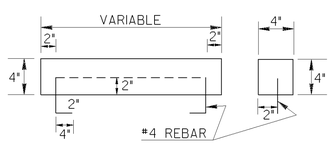

DETAILS OF 4" CONCRETE BAFFLE

GENERAL NOTES:

1. SPECIFICATIONS: GEORGIA STANDARD, CURRENT EDITION, AND SUPPLEMENTS THERETO.
2. SIZE AND DIMENSIONS OF TYPE A OR TYPE B FLUMES MAY BE ADJUSTED FOR AN INDIVIDUAL SITE WHERE SHOWN ON THE PLANS OR DIRECTED BY THE ENGINEER.
3. AT LOCATIONS WHERE FLUME OUTLETS INTO AN INLET STRUCTURE, OMIT BAFFLE AND DOWNTURN END AND CONNECT FLUME TO THE INLET STRUCTURE.
4. SAND CEMENT BAG RIP RAP SHALL BE OMITTED IN PAVED DITCHES OR WHERE OTHER APPROVED EROSION CONTROL MATERIALS ARE USED.
5. POURED IN PLACE CONCRETE SHALL BE CLASS B MINIMUM. CLASS A CONCRETE SHALL BE USED FOR BAFFLES IF PRECAST.
6. BASIS OF PAYMENT:
   - CLASS B CONCRETE --- CU. YDS.
   - BAR REINFORCEMENT STEEL --- LB.
   - SAND CEMENT BAG RIP RAP, 6"IN. OR 8 IN. --- SQ. YDS.

CONCRETE FLUMES TYPES "A" & "B"

NO SCALE

REV & REDR. OCT. 1983

D-9