STATE	PROJECT NUMBER	SHEET NO.	TOTAL SHEETS
GA.	BR000-0001-00(365)	71	152

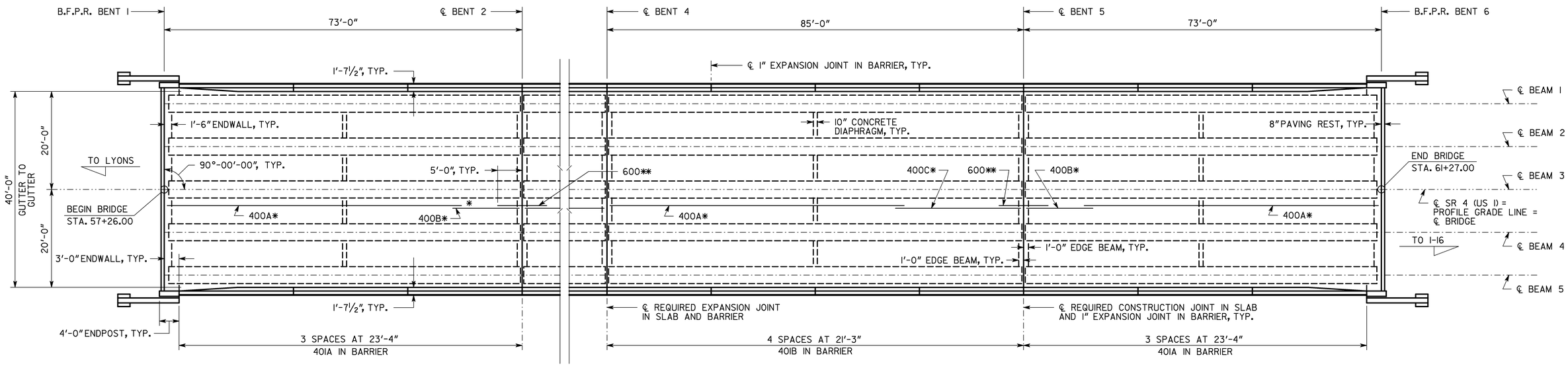

✱ LAP 400 BARS 1'-9" MIN.

✱✱ 2-600 BARS BETWEEN 400 BARS IN TOP OF SLAB, TYP.

JOINT OPENING	
TEMPERATURE (°F)	W (IN.)
30	1⅞"
60	1⅜"
90	¾"

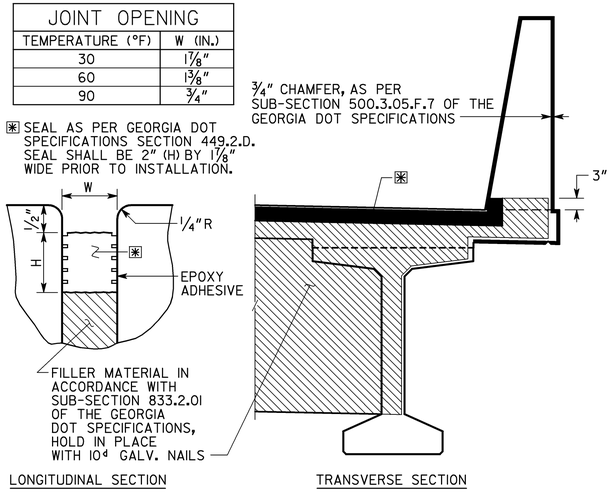

EXPANSION JOINT DETAILS

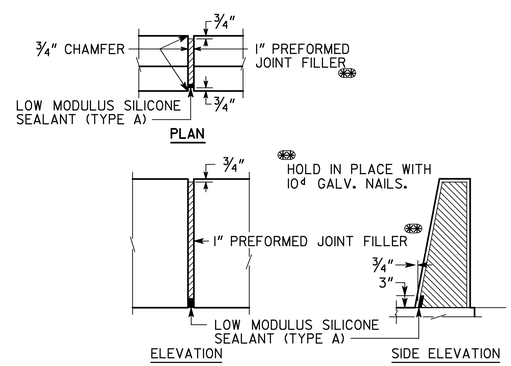

DETAILS OF 1" EXPANSION JOINT IN BARRIER

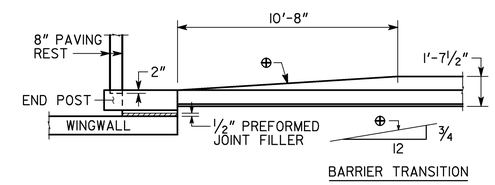

BARRIER TRANSITION DETAIL

MAINTAIN 2" CLEARANCE ON ALL REINFORCEMENT UNLESS OTHERWISE NOTED.

SUPERSTRUCTURE QUANTITIES						
ITEM	SPAN 1	SPAN 2	SPAN 3	SPAN 4	SPAN 5	TOTAL
LUMP - CY SUPERSTR CONCRETE, CL AA	107.3	111.2	109.0	110.3	107.3	545.1
LUMP - LB SUPERSTR REINF STEEL	24,983	24,943	26,914	24,943	24,983	128,906

END POST CONCRETE AND BAR REINFORCEMENT STEEL INCLUDED IN END SPAN QUANTITIES.
REINFORCING QUANTITY FOR 600 BARS INCLUDED IN SPANS 1, 3, AND 5.

BRIDGE NO. 1

GEORGIA
DEPARTMENT OF TRANSPORTATION
ENGINEERING DIVISION-OFFICE OF BRIDGES AND STRUCTURES

DATE | REVISIONS | BY

DECK PLAN

SR 4 (US 1) OVER SWIFT CREEK

TOOMBS COUNTY BR000-0001-00(365)

DRAWING NO. 35-03

BRIDGE SHEET 3 OF 13

NO SCALE OCTOBER 2010

DESIGNED JRT CHECKED EJC REVIEWED WEI/WMD
DRAWN JRT/DM DESIGN GROUP EJC APPROVED PVL

1 INCH WHEN PRINTED FULL SIZE

T0001365.DGN