STATE	PROJECT NUMBER	SHEET NO.	TOTAL SHEETS
GA.	BR000-0001-00(358)	62D	

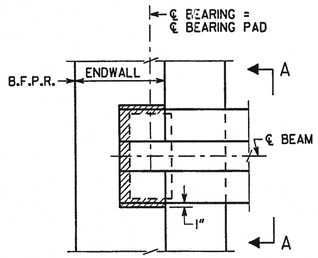

PLAN
BENT 1 SHOWN
BENT 7 SIMILAR

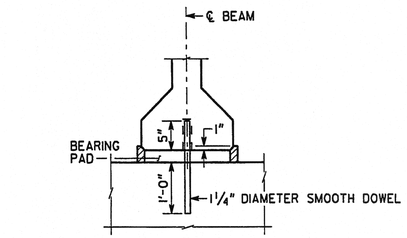

PREFORMED FOAM JOINT FILLER SHALL BE IN ACCORDANCE WITH SUB-SECTION 833.2.10 OF THE GEORGIA DOT SPECIFICATIONS.

ENDWALL NOT SHOWN

SECTION A-A

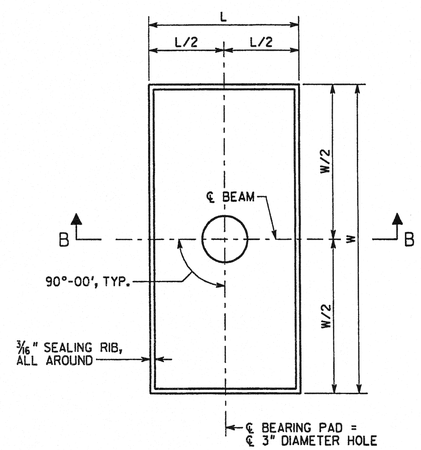

PLAN

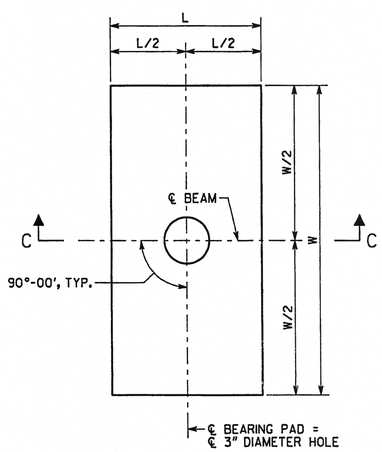

PLAN

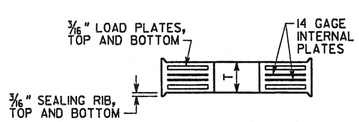

SECTION B-B

BEARING PAD
TYPE A

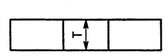

SECTION C-C

BEARING PAD
TYPE B

BENT	BEARING PADS								
	TYPE	W	L	T	NUMBER OF INTERNAL PLATE(S)	DESIGN SHEAR DEFLECTION	DESIGN LOADS (KIPS)		
							DEAD LOAD	LIVE LOAD (NO IMPACT)	DEAD LOAD + LIVE LOAD
1	A	16"	9"	2⅝"	4	0.605"	47.9	44.1	92.0
2	A	16"	9"	2⅝"	4	0.403"	36.5	44.3	80.8
3	B	16"	9"	½"	---	---	---	---	---
4	B	16"	9"	½"	---	---	---	---	---
5	B	16"	9"	½"	---	---	---	---	---
6	A	16"	9"	2⅝"	4	0.403"	36.5	44.3	80.8
7	A	16"	9"	2⅝"	4	0.605"	47.9	44.1	92.0

BEARING PAD NOTES

1) BEARING PADS HAVE BEEN DESIGNED ACCORDING TO AASHTO SPECIFICATIONS DIVISION I, SECTION 14.6.6 AND SHALL BE FURNISHED IN ACCORDANCE WITH AASHTO SPECIFICATIONS DIVISION II, SECTION 18, BEARINGS.
2) 1¼" DIAMETER SMOOTH DOWELS SHALL BE ASTM A 709 GRADE 36.
3) BEARING PADS SHALL BE MADE OF 60 DUROMETER HARDNESS NEOPRENE, GRADE 2 OR HIGHER.
4) 3" DIAMETER HOLE IN BEARING PADS MAY BE FORMED OR DRILLED.
5) BEARING PADS SHALL HAVE ¼" COVER ON THE TOP, BOTTOM, AND SIDES AND AROUND THE HOLE.
6) 3/16" LOAD PLATES AND 14 GAGE INTERNAL PLATE(S) (IF REQUIRED) SHALL BE ASTM A 709 GRADE 36 OR ASTM A 1011 GRADE 36.
7) NUMBER OF INTERNAL PLATES SHOWN FOR ILLUSTRATION PURPOSES ONLY. THE NUMBER OF INTERNAL PLATE(S) SPECIFIED SHALL BE EQUALLY SPACED BETWEEN LOAD PLATES.
8) USE OF 1½° MOLD DRAFT IS OPTIONAL.

DATE: AUG 29 2011

Approved in general. Details not checked. This approval shall not relieve the Contractor of any responsibility for conformity with the contract Plans and Specifications.

Georgia DOT
Office of Bridge Design
By: SKG

BRIDGE NO. 1

SOUTHERN CONCRETE CONSTRUCTION CO., INC.
P. O. BOX 711
ALBANY, GA 31702
TEL: (229) 435-0786
FAX: (229) 434-4755

BEARING DETAILS
SR 37 (1ST AVENUE) OVER OKAPILCO CREEK
COLQUITT COUNTY BR000-0001-00(358)

JOB NO. 201132 JULY 2011

DESIGNED GDOT / BHB
DRAWN BHB
CHECKED BHB
SCALE NO SCALE

REVISIONS | DATE | BY

BRIDGE SHEET 10 OF 11
SHEET 4 OF 9

C201132.DGN