STATE	PROJECT NUMBER	SHEET NO.	TOTAL SHEETS
GA.	BR000-0001-00(35	106	167

BRICK MANHOLE SECTION
(PIPE OUTSIDE DIAMETER IS 48" OR MORE)

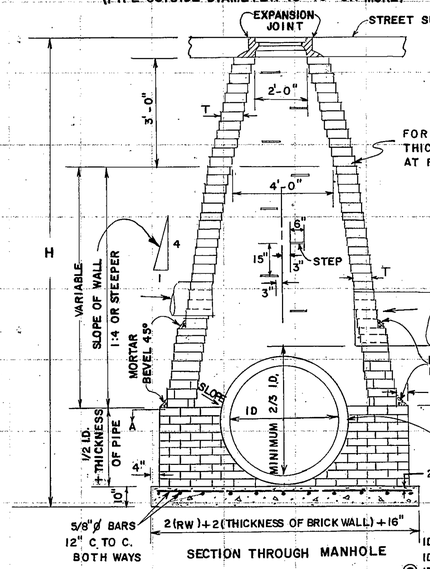

SECTION THROUGH MANHOLE

MODIFY CHANNEL SUIT PIPE SIZES AND LOCATIONS CHANNEL OF OUTLET & TO BE THE SAME SIZE AS THE OUTLET PIPE.

ID = 42" — RW = 2'-8"
ID = 48" — RW = 3'-0"
ID = 54" — RW = 3'-2"
ID = 60" — RW = 3'-4"
ID = 66" — RW = 3'-7"
ID = 72" — RW = 3'-9"
ID = 78" — RW = 3'-11"
ID = 84" — RW = 4'-2"
RW = INSIDE RADIUS OF WALL

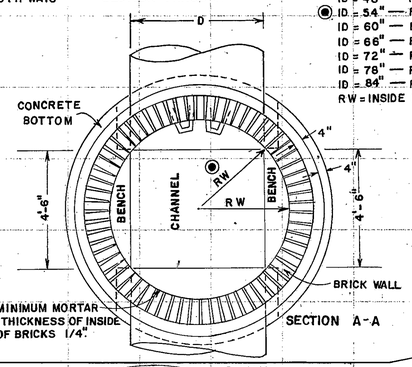

NOTE: MINIMUM MORTAR JOINT THICKNESS OF INSIDE EDGE OF BRICKS 1/4".

SECTION A-A

REINFORCED CONCRETE COVER

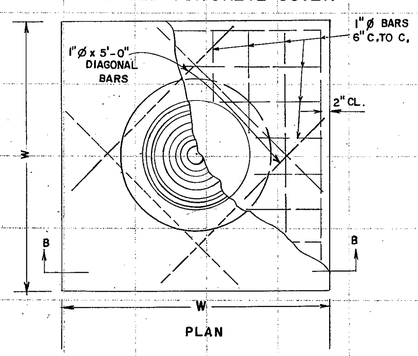

SECTION B-B

FRAME TO BE USED WITH CONCRETE COVER

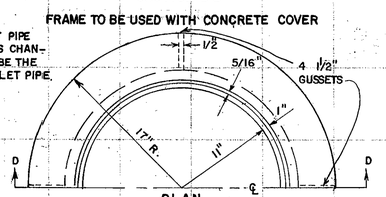

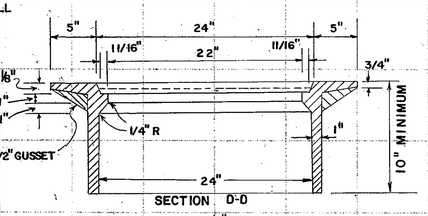

SECTION D-D

SCALE: 1 1/2" = 1'

PLACEMENT FOR CONCRETE COVER

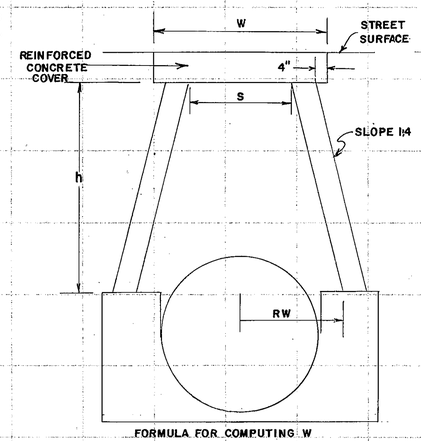

FORMULA FOR COMPUTING W
RW = INSIDE RADIUS OF WALL
S = 2RW − h/2
W = S + 24"

NOTE: USE CONCRETE COVER WITH MANHOLE CASTINGS IF FILL FROM TOP OF PIPE TO FINISHED SURFACE IS LESS THAN:

4'-6" FOR 42" PIPE
5'-0" FOR 48" PIPE
5'-6" FOR 54" PIPE
6'-0" FOR 60" PIPE
6'-6" FOR 66" PIPE
7'-0" FOR 72" PIPE
7'-6" FOR 78" PIPE
8'-0" FOR 84" PIPE

THICKNESS OF BRICK WALL
(SEE DETAIL AT FAR RIGHT)

DEPTH	THICKNESS (T)
TO 10'	*8" MIN.
10' TO 20'	12" MIN.
20' TO 30'	16" MIN.

*FOR COMBINATION BRICK & PRECAST M.H. (SEE BELOW) ONLY 12" OR 16" BRICK WALL THICKNESS IS TO BE USED FOR BASE.

BRICK MANHOLE SECTION
(PIPE OUTSIDE DIAMETER IS LESS THAN 48")

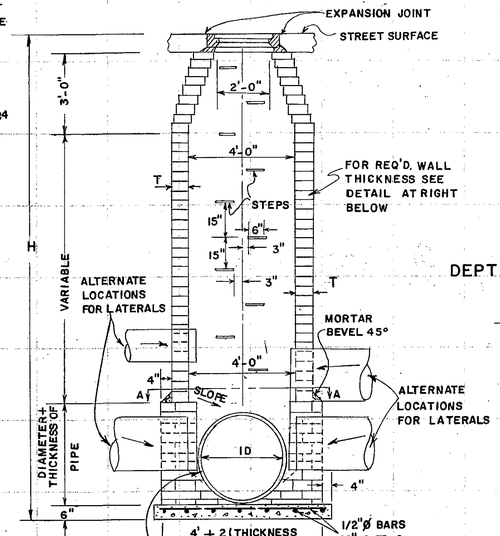

MODIFY CHANNEL TO SUIT PIPES AND LOCATIONS. CHANNEL AT OUTLET END TO BE THE SAME SIZE AS OUTLET PIPE.

SECTION THROUGH MANHOLE

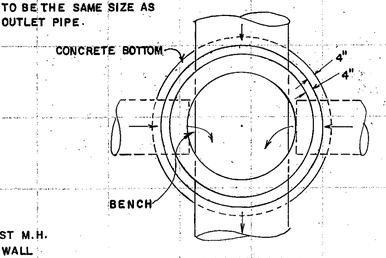

SECTION A-A

CAST IRON STEP

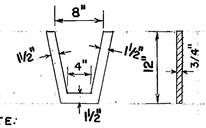

SCALE: 1 1/2" = 1'

NOTE: STEPS ARE REQUIRED IN ALL MANHOLES WHERE "H" IS GREATER THAN 4'-0". NUMBER AND LOCATION OF STEPS TO BE AS DIRECTED BY THE ENGINEER. PLASTIC OR RUBBER COATED STEPS LISTED IN THE GA. D.O.T. QUALIFIED PRODUCTS MANUAL MAY BE SUBSTITUTED.

DEPTH LIMITS FOR INCREASING WALL THICKNESS

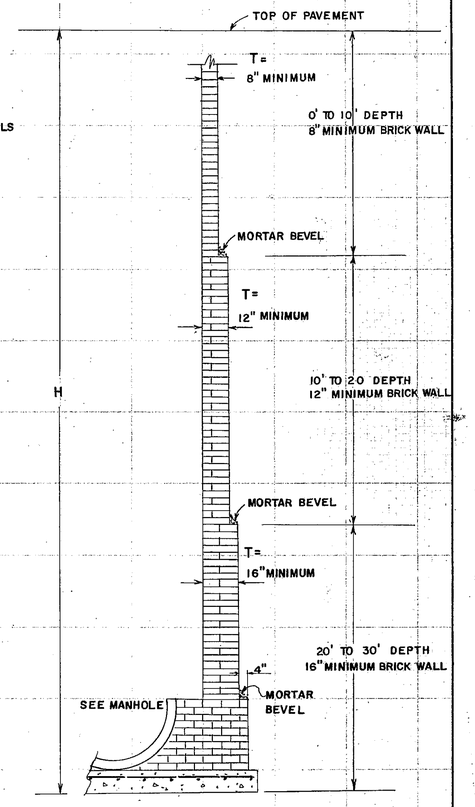

MANHOLE CASTINGS

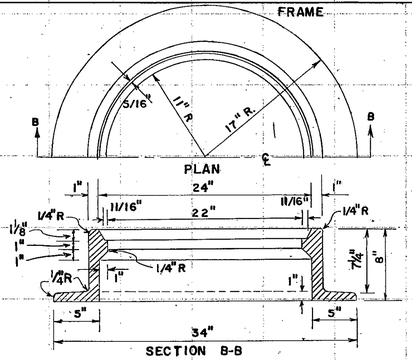

SECTION B-B

SCALE: 1 1/2" = 1'

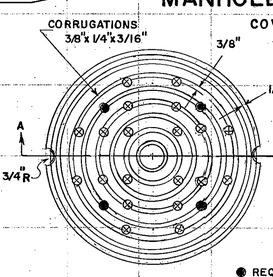

SCALE: 1 1/2" = 1' TOP

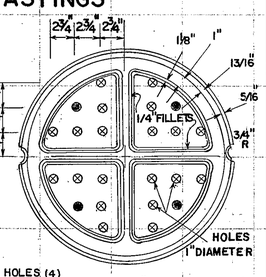

SCALE: 1 1/2" = 1' BOTTOM

● REQUIRED HOLES (4)
⊗ OPTIONAL HOLES

APPROXIMATE WEIGHTS

C.I. FRAME	282 LBS.
C.I. COVER	178 LBS.

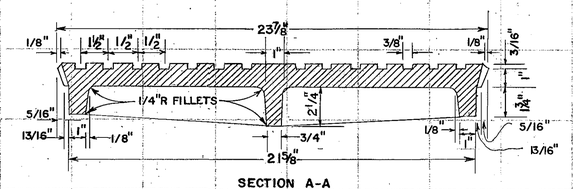

SECTION A-A

SCALE 3" = 1'

NOTE: COVER AND FRAME MUST BE FITTED BEFORE LEAVING SHOP. PAINT ACTUAL WEIGHT OF EACH CASTING ON ITS FACE.

MANHOLE FRAME & COVER SHOWN ON STD. 1011 A PRECAST MAY BE USED AN ALTERNATE TO CASTINGS SHOWN HERE.

ALTERNATE - COMBINATION BRICK & PRECAST MANHOLES

NOTES FOR COMBINATION MANHOLE:

— BRICK PORTION OF MANHOLE WILL BE CONSTRUCTED WITH SEAT TO GIVE BEST POSSIBLE FIT FOR PRECAST UNIT. MINIMUM THICKNESS FOR BRICK WALL WILL BE 12" FOR H TO 20 FT. AND 16" FOR H>20 FT. TO 30 FT.

— PRECAST UNIT WITHOUT TONGUE OR GROOVE AT BOTTOM SHALL BE PLACED IN BRICK SEAT WITH MORTAR IN JOINT ALL ROUND. BRICK BASE SHALL SET FOR 24 HOURS MIN. BEFORE PRECAST SECTIONS ARE INSTALLED.

— STEPS IN THE BRICK PORTION OF MANHOLE WILL BE IN ALIGNMENT WITH AND MATCH THE STEPS IN THE PRECAST SECTIONS RATHER THAN AS SHOWN FOR THE ALL BRICK MANHOLES.

SEE STANDARD 1011A PRECAST FOR PRECAST MANHOLE DETAILS.

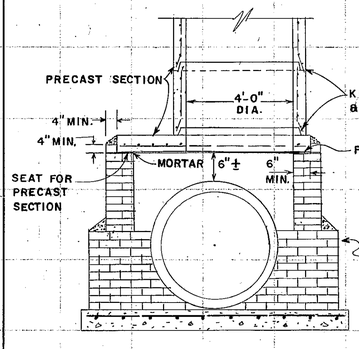

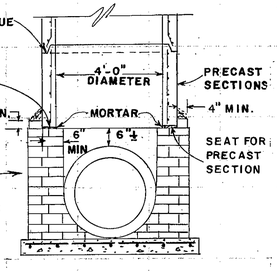

DEPARTMENT OF TRANSPORTATION
STATE OF GEORGIA

STANDARD
BRICK MANHOLES

SCALE AS SHOWN — REV. & RE DR. OCTOBER, 1981

DES. 8-58
DRW. R.M.U.
TRA. G.M.E.
CHK. R.K.C.

(SUBMITTED) Floyd E. Hardy
STATE ROAD & AIRPORT DESIGN ENGR.
(APPROVED) Thomas D. Moreland Jr.
STATE HIGHWAY ENGINEER

NUMBER 1011A

FORM EF6