STATE	COUNTY	PROJECT NUMBER	SHEET NO.	TOTAL SHEETS
GA.	COLQUITT	BR000-0001-00(358)	105	167

DROP CABLE SPLICE DETAIL FOR LOCAL CONTROLLER WITH STAR MODEM

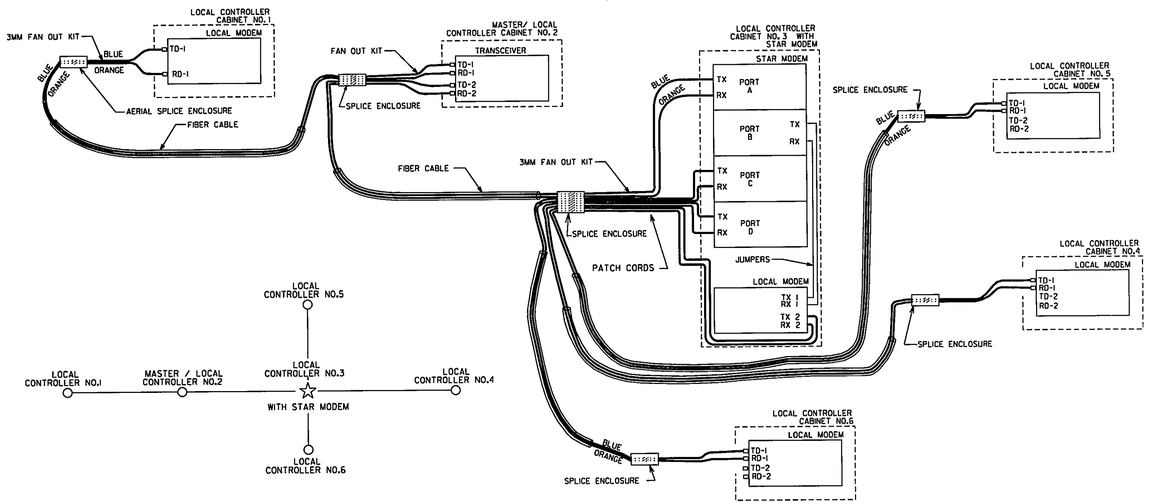

FIBER OPTIC DISTRIBUTION DETAIL (CLOSED LOOP SYSTEM ONLY)

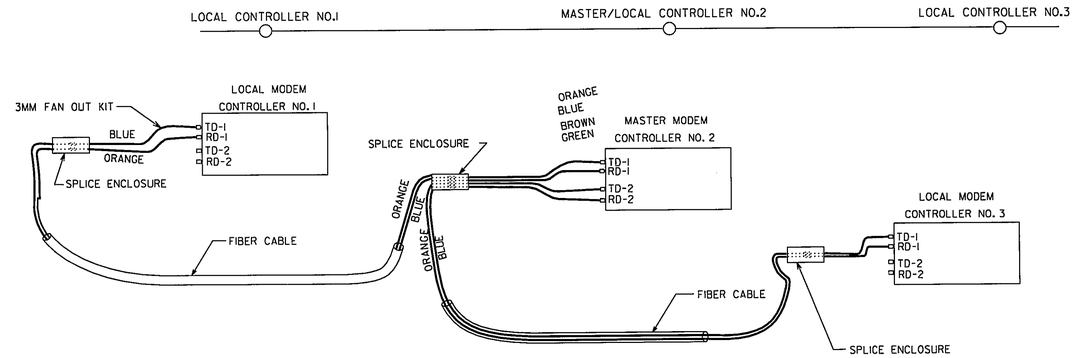

DROP CABLE SPLICE DETAIL FOR MASTER / LOCAL CONTROLLER WITH STAR MODEM

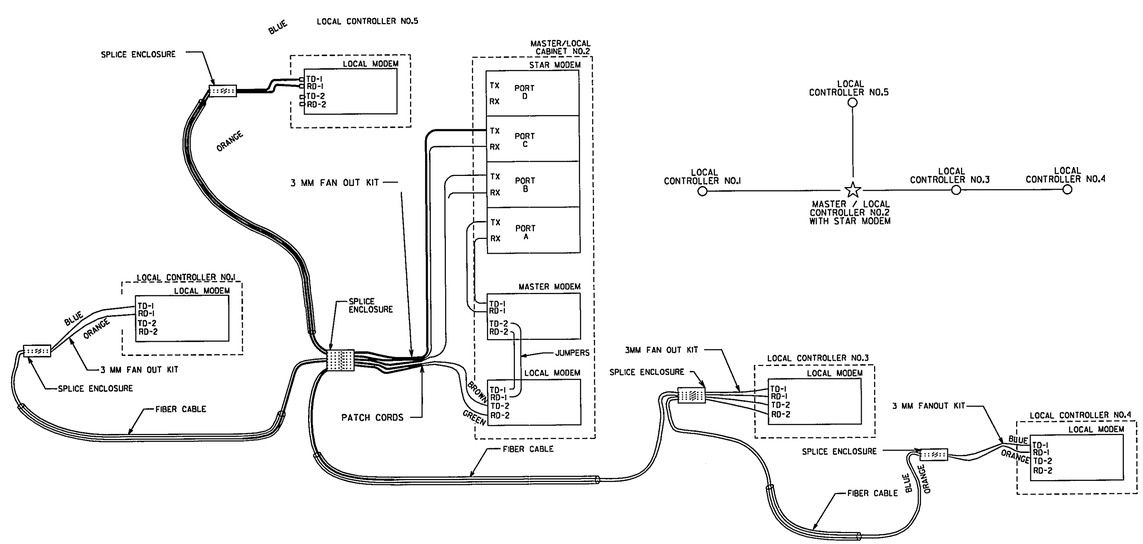

REV. BY:	REVISION DESCRIPTION	DATE

DEPARTMENT OF TRANSPORTATION
STATE OF GEORGIA

TRAFFIC SIGNAL DETAIL

FIBER OPTICS DETAILS
2 OF 2

APRIL 2010
NOT TO SCALE - REPORT ERRORS

DETAIL NUMBER
TS-11