10/13/2011 9:54:20 AM \\GDOT-DSN1\GOPLOT\QCF\GO_Klp8000.qcf dwilson M:\0001220-CSX Railroad Bridge\DGN\181.PDF

STATE	PROJECT NUMBER	SHEET NO.	TOTAL SHEETS
GA.	BR000-0001-00(220)	181	237

USES:

TEMPORARY PIPE SLOPE DRAIN IS USED TO CARRY WATER FROM THE WORK AREA TO A LOWER ELEVATION. TYPICAL SPACING SHALL BE AT INTERVALS OF 500 FEET ON DIAMETER TO 2% GRADES, 200 FEET ON STEEPER GRADES, AND MORE FREQUENTLY AS DICTATED BY EXISTING FIELD CONDITIONS.

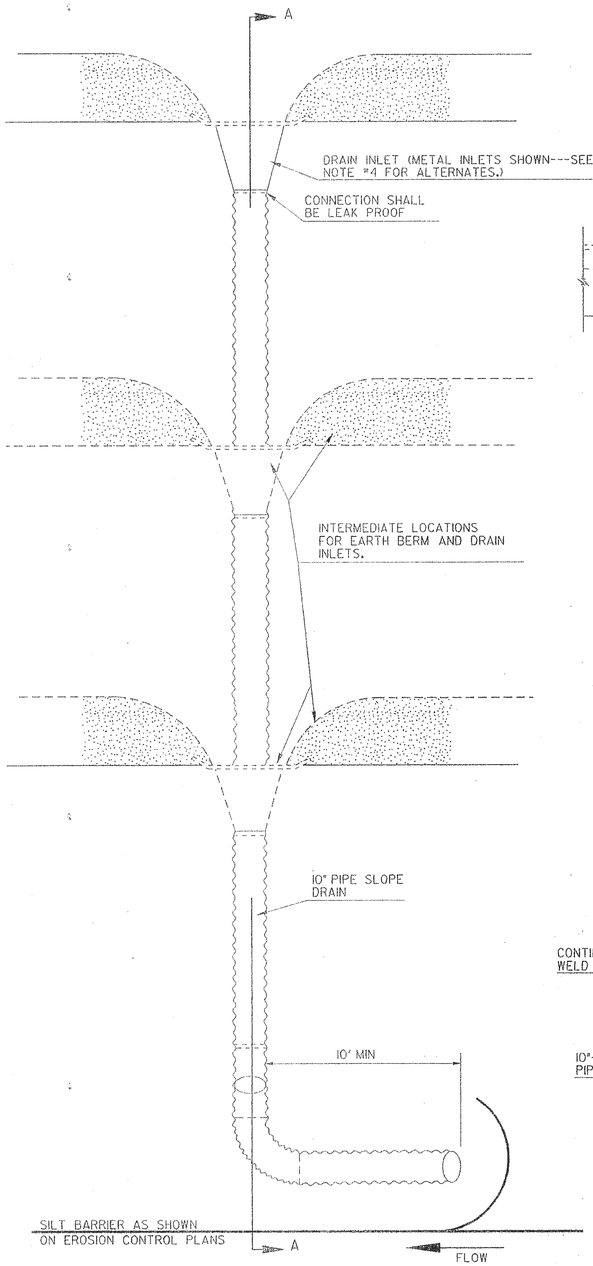

PLAN VIEW
SCALE: 1/2" = 1'-0"

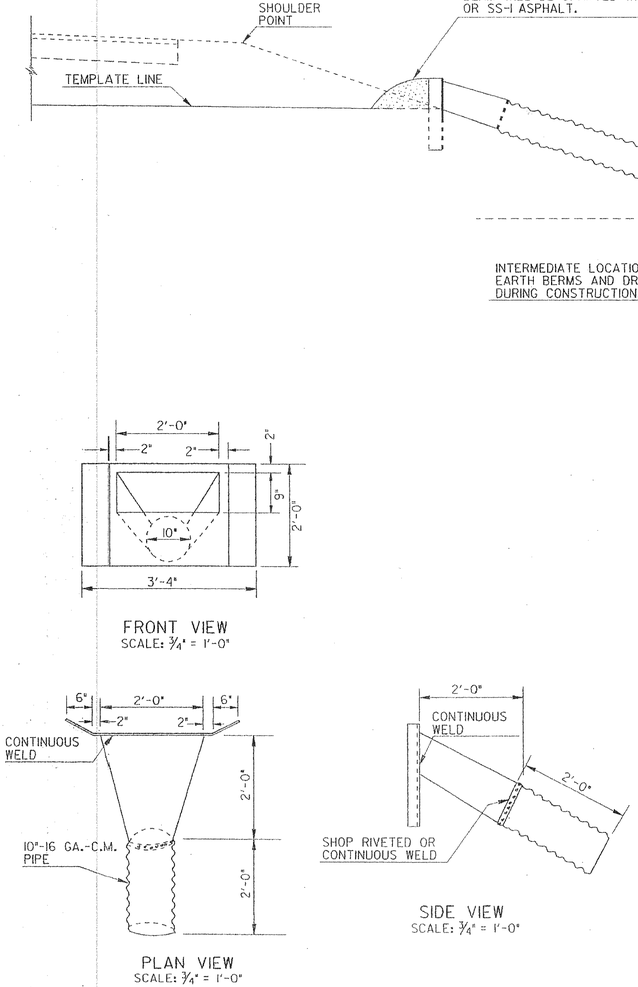

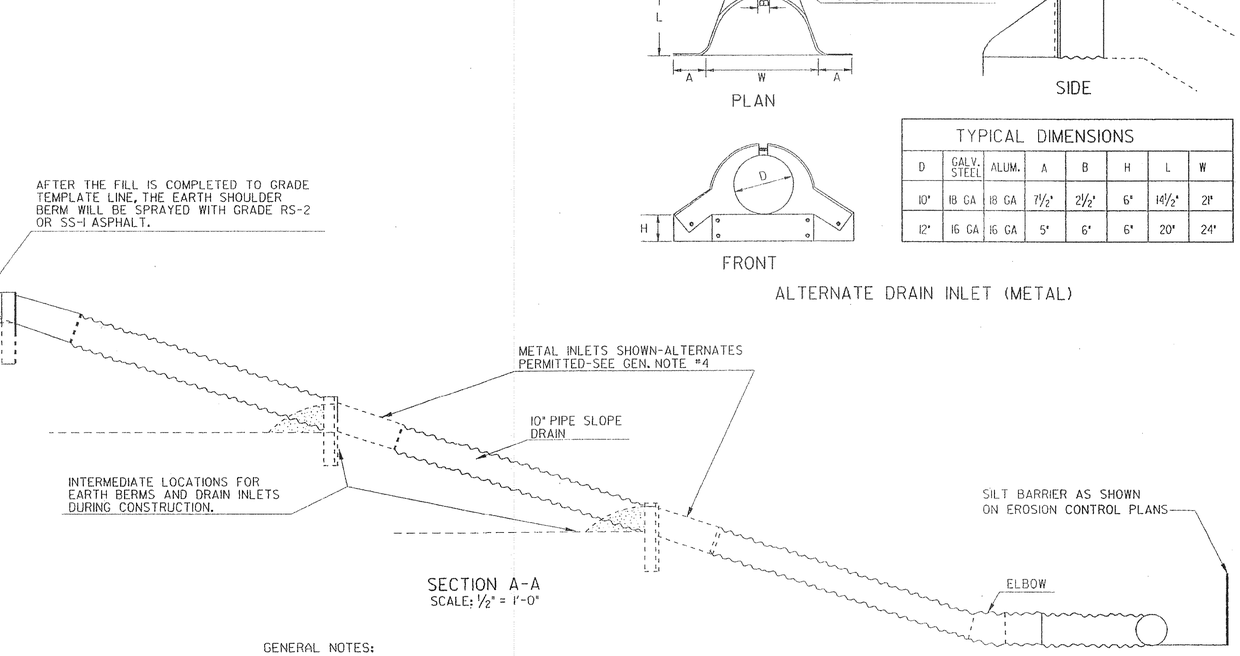

SECTION A-A
SCALE: 1/2" = 1'-0"

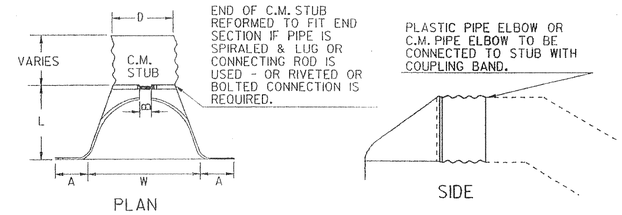

FRONT

TYPICAL DIMENSIONS

D	GALV. STEEL	ALUM.	A	B	H	L	W
10"	18 GA	18 GA	7½"	2½"	6"	14½"	21"
12"	16 GA	16 GA	5"	6"	6"	20"	24"

ALTERNATE DRAIN INLET (METAL)

GENERAL NOTES:

1. DRAIN INLETS AND SLOPE DRAIN PIPE USED FOR TEMPORARY EROSION AND POLLUTION CONTROL UNDER SECTION 163 WILL BE RETAINED FOR USE AS INVENTORY ITEMS BY THE CONTRACTOR.
2. EROSION PROTECTION AT PIPE OUTLET WILL BE PROVIDED AS APPROPRIATE. THE PIPE MAY BE EXTENDED TO OUTLET IN A PAVED DITCH OR TEMPORARY DISSIPATORS CONSTRUCTED OF LOGS OR STONE MAY BE USED. NO SEPARATE PAYMENT WILL BE MADE FOR THIS PROTECTION MEASURE.
3. SLOPE DRAIN PIPE MAY BE ANY TYPE ALLOWED BY THE GA. STANDARD SPECIFICATIONS.
4. ALLOWABLE DRAIN INLET ALTERNATES WILL BE:
   (A) IF SLOPE DRAIN IS PLASTIC, A PLASTIC DRAIN INLET OR PLASTIC FLARED END SECTION HAVING SIMILAR DESIGN TO METAL INLETS OR END SECTIONS MAY BE USED FOR THE DRAIN INLET.
   (B) A METAL FLARED END SECTION MAY BE USED WITH EITHER PLASTIC PIPE OR C.M. PIPE. IF THE END SECTION WAS MADE FOR LARGER PIPE THAN THE SLOPE DRAIN PIPE, AN APPROVED MODIFIED CONNECTION WILL BE REQUIRED BETWEEN THE PIPE AND THE END SECTION.
   (C) A SUMP HOLE WITH DIMENSIONS AT LEAST EQUIVALENT TO THE METAL DRAIN AND LINED WITH POLYETHYLENE OR OTHER MATERIAL AS APPROVED BY THE ENGINEER MAY BE USED WITH ANY TYPE OF PIPE.
   (D) THE METAL DRAIN INLET SHOWN MAY BE USED WITH EITHER 10" C.M. PIPE OR PLASTIC PIPE.
5. THE CONTRACTOR MAY ELECT TO USE PIPE LARGER THAN 10" DIAMETER WITH NO ADDITIONAL PAYMENT.

BY	REVISION	DATE
	ADDED ELBOW	2-25-00

CONSTRUCTION DETAILS

TEMPORARY PIPE SLOPE DRAIN WITH DRAIN INLET

BRIDGE OVER HEART OF GEORGIA RAILROAD

56-001

SCALE AS SHOWN

D-19

10/13/2011 9:54:20 AM \\GDOT-DSN1\GOPLOT\QCF\GO_Klp8000.qcf dwilson M:\0001220-CSX Railroad Bridge\DGN\181.PDF