10/13/2011 2:20:38 PM \\GDOT-DSN1\GOPLOT\QCF\GO_K1p8000.qcf dwilson M:\0001220-CSX Railroad Bridge\Design\Final\Glenn Set\0001220_0131.pdf
10/13/2011 9:43:49 AM \\GDOT-DSN1\GOPLOT\QCF\GO_K1p8000.qcf dwilson M:\0001220-CSX Railroad Bridge\Design\Bridge Design\Bridge Plans 040111\TEMP005.PDF

STATE	PROJECT NUMBER	SHEET NO.	TOTAL SHEETS
GA.	BR000-0001-00(220)	131	237

DIMENSION "D" IS MEASURED FROM TOP OF SLAB TO TOP OF BEAM AT ℄ BEARING. VARY "D" BETWEEN BEARINGS TO COMPENSATE FOR DEAD LOAD DEFLECTION AND VERTICAL CURVE. MAINTAIN A CONSTANT SLAB THICKNESS OF 7" BETWEEN BEAMS AND 8" AT OVERHANGS.

"D" = 9" FOR INTERIOR BEAMS
"D" = 10" FOR EXTERIOR BEAMS

⊠ - CENTERED OVER INTERMEDIATE BENTS

R. - DENOTES RADIAL DIMENSION

✱ - MEASURED ALONG RIGHT EDGE OF DECK

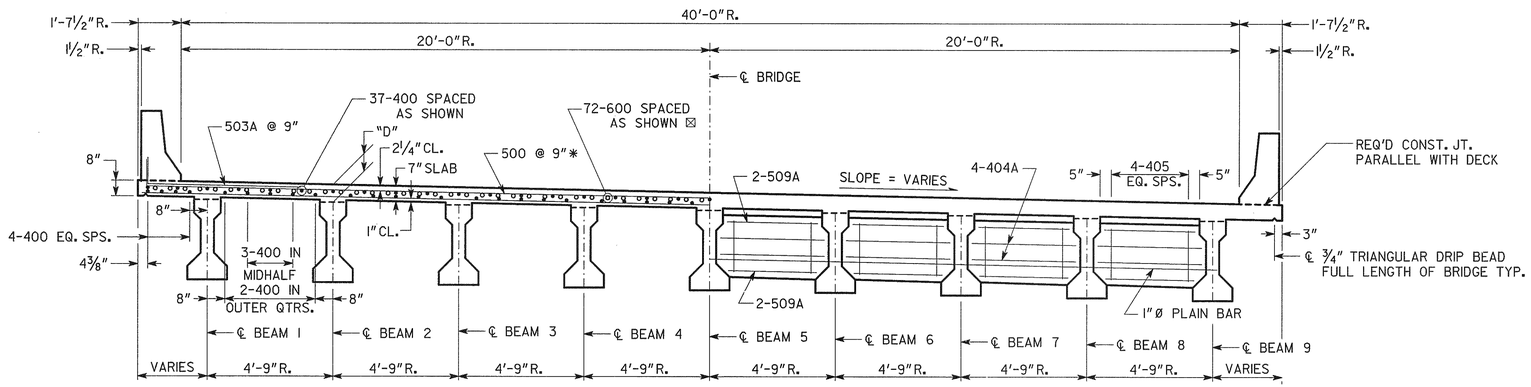

SECTION THRU SLAB

SECTION THRU DIAPHRAGM

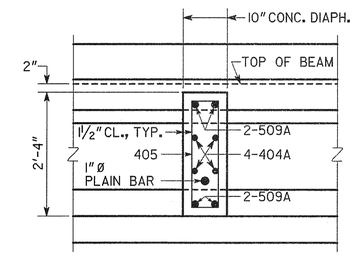

SLAB REINFORCEMENT NOT SHOWN.

SECTION THRU DIAPHRAGM

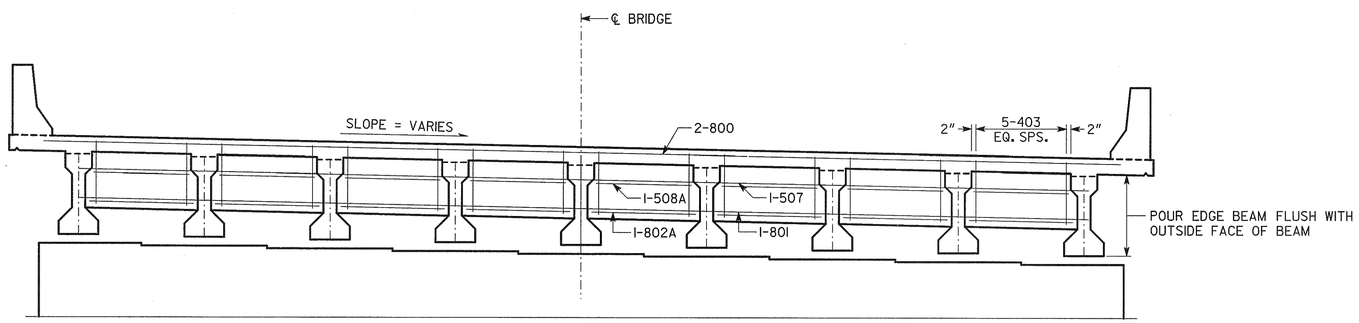

SECTION THRU EDGE BEAM

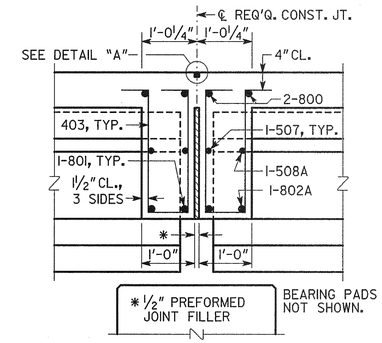

SLAB REINFORCEMENT NOT SHOWN.

SECTION THRU EDGE BEAM
(BENT 2 SHOWN)

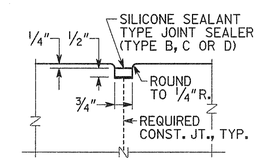

DETAIL "A"

BRIDGE NO. 1

GEORGIA
DEPARTMENT OF TRANSPORTATION
ENGINEERING DIVISION-OFFICE OF BRIDGES AND STRUCTURES

DECK SECTION - SPAN 2
SR 31-US 441-US 319 OVER
HEART OF GEORGIA RAILROAD

WHEELER CO. BR000-0001-00(220)

SCALE: ⅜" = 1'-0" FEBRUARY 2011

DRAWING NO. 35-05
BRIDGE SHEET 5 OF 15

REVISIONS: DATE / BY

DESIGNED LAIII | CHECKED WMD/WEI | REVIEWED WMD/WEI
DRAWN LAIII | DESIGN GROUP LAIII | APPROVED BFR

10/13/2011 9:43:49 AM \\GDOT-DSN1\GOPLOT\QCF\GO_K1p8000.qcf dwilson M:\0001220-CSX Railroad Bridge\Design\Bridge Design\Bridge Plans 040111\TEMP005.PDF
10/13/2011 2:20:38 PM \\GDOT-DSN1\GOPLOT\QCF\GO_K1p8000.qcf dwilson M:\0001220-CSX Railroad Bridge\Design\Final\Glenn Set\0001220_0131.pdf