STATE	PROJECT NUMBER	SHEET NO.	TOTAL SHEETS
GA.	BR000-0001-00(216)	197	322

DIMENSION "D" IS MEASURED FROM TOP OF SLAB TO TOP OF BEAMS AT CENTERLINE BEARING. VARY "D" BETWEEN BEARINGS TO COMPENSATE FOR DEAD LOAD DEFLECTION. MAINTAIN A CONSTANT SLAB THICKNESS OF 7⅜"
"D" = 9¼"

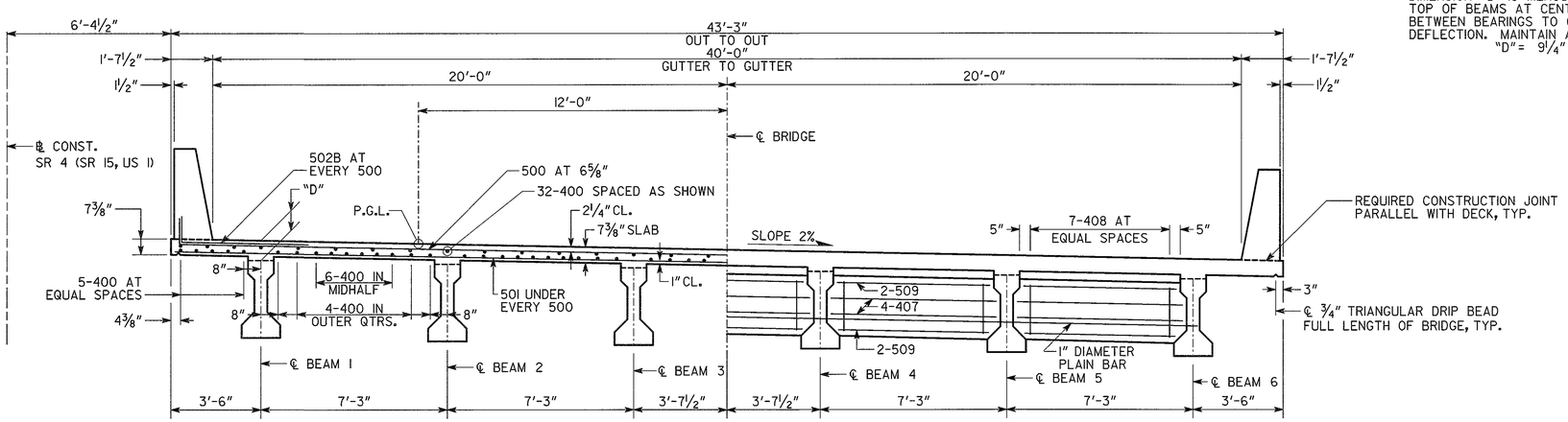

HALF SECTION THRU SLAB
LOOKING AHEAD

HALF SECTION THRU DIAPHRAGM
LOOKING AHEAD

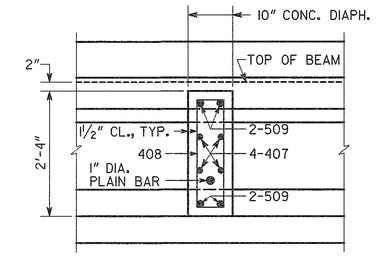

SLAB REINFORCEMENT NOT SHOWN

SECTION THRU DIAPHRAGM
NO SCALE

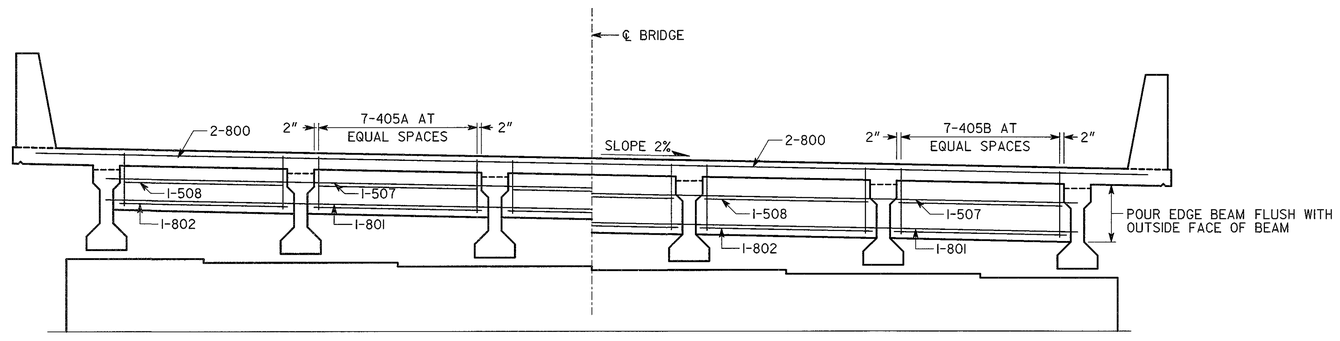

HALF SECTION THRU EDGE BEAM
BENT 2 (AHEAD)
BENT 7 (BACK)
LOOKING AHEAD

HALF SECTION THRU EDGE BEAM
BENT 3-6 (AHEAD & BACK)
LOOKING AHEAD

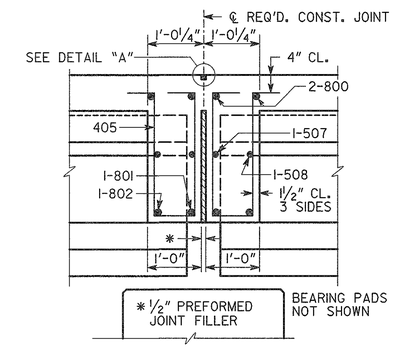

SLAB REINFORCEMENT NOT SHOWN

SECTION THRU EDGE BEAM
BENTS 3 - 6
NO SCALE

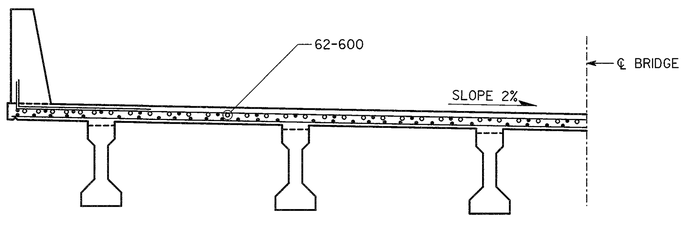

HALF SECTION THRU SLAB AT INTERMEDIATE BENT
LOOKING AHEAD

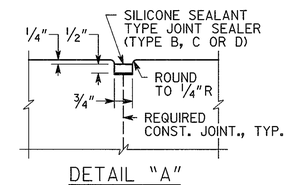

DETAIL "A"
NO SCALE

NOTES:

1. MAINTAIN 2" CLEARANCE TO ALL REINFORCEMENT UNLESS OTHERWISE NOTED.
2. BARS 405 ARE PLACED PARALLEL TO BEAMS.

BRIDGE NO. 3

Heath & Lineback Engineers
INCORPORATED
2390 CANTON ROAD, BUILDING 200
MARIETTA, GEORGIA 30066-5393
(770)424-1668

GEORGIA
DEPARTMENT OF TRANSPORTATION
ENGINEERING DIVISION-OFFICE OF BRIDGES AND STRUCTURES

DATE | REVISIONS | BY

DECK SECTIONS - SPANS 2-6
SR 4 (SR 15, US1)
OVER WILLIAMS CREEK
TOOMBS COUNTY BR000-0001-00(216)

DRAWING NO. 35 - 049
BRIDGE SHEET 5 OF 13

SCALE: ⅜" - 1'-0" NOVEMBER 2013

DESIGNED JRL/KAK | CHECKED RLF/MS | REVIEWED WMD/DLC
DRAWN JRL | DESIGN GROUP ACB | APPROVED BFR

1 INCH WHEN PRINTED FULL SIZE

J# 2009024 BRIDGE \ BRIDGE 3 WILLIAMS \ 000216_3_DS2.DGN